7. Exploded Views and Parts List

Contents

7.1 Main

7.2 Cover Ass'y

7.3 Front Cover Ass'y

7.4 Rear Cover Ass'y

7.5 OPE Cover Ass'y

7.6 Frame

7.7 MP Ass'y

7.8 Main Drive Ass'y

7.9 Fuser Drive Ass'y

7.10 Duplex Unit (Optional)

7.11 Fuser Unit

7.12 Cassette Unit

IT-Spares.eu

7.1 Main

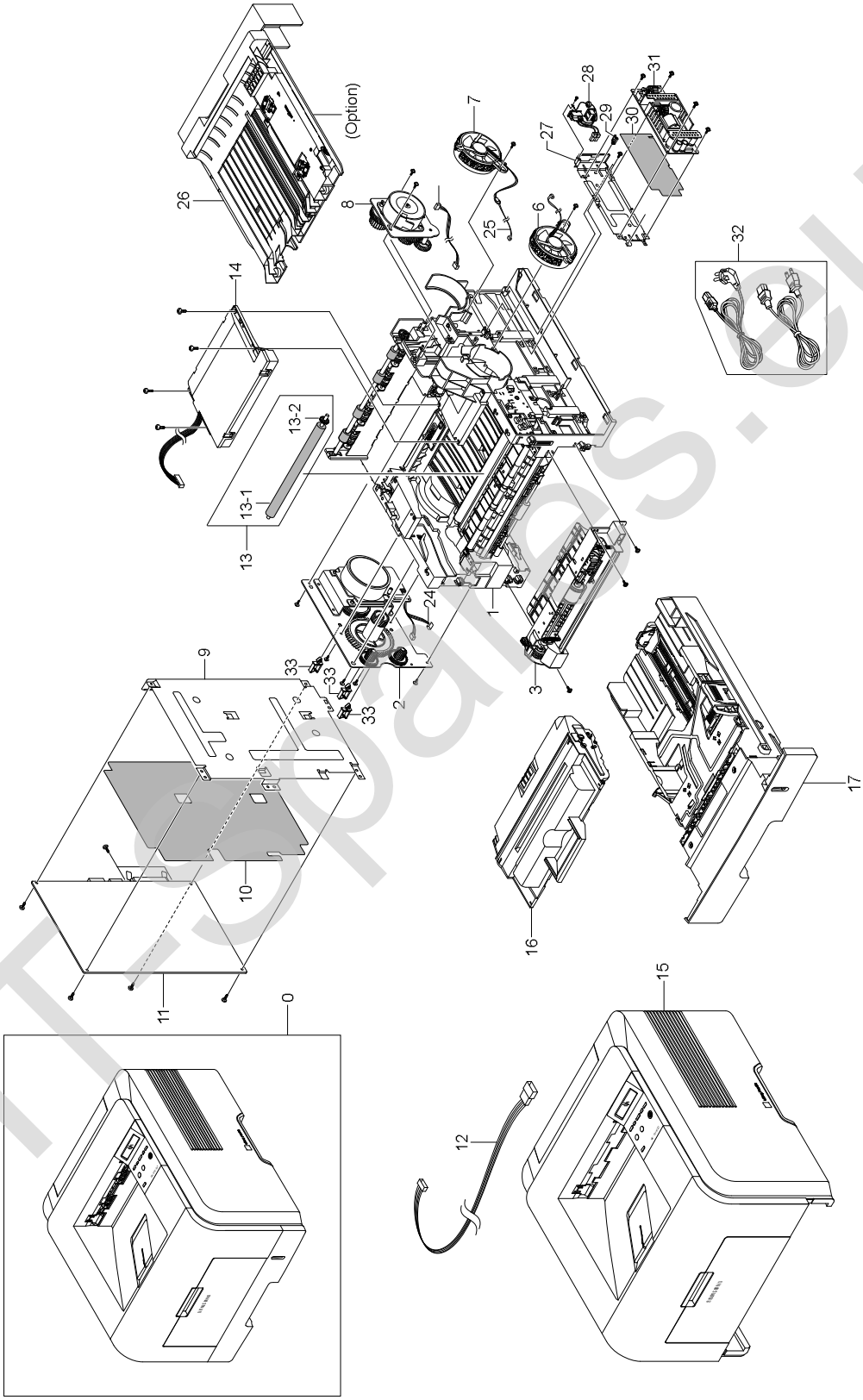

IT-Spares.eu

7.2 Cover Ass'y

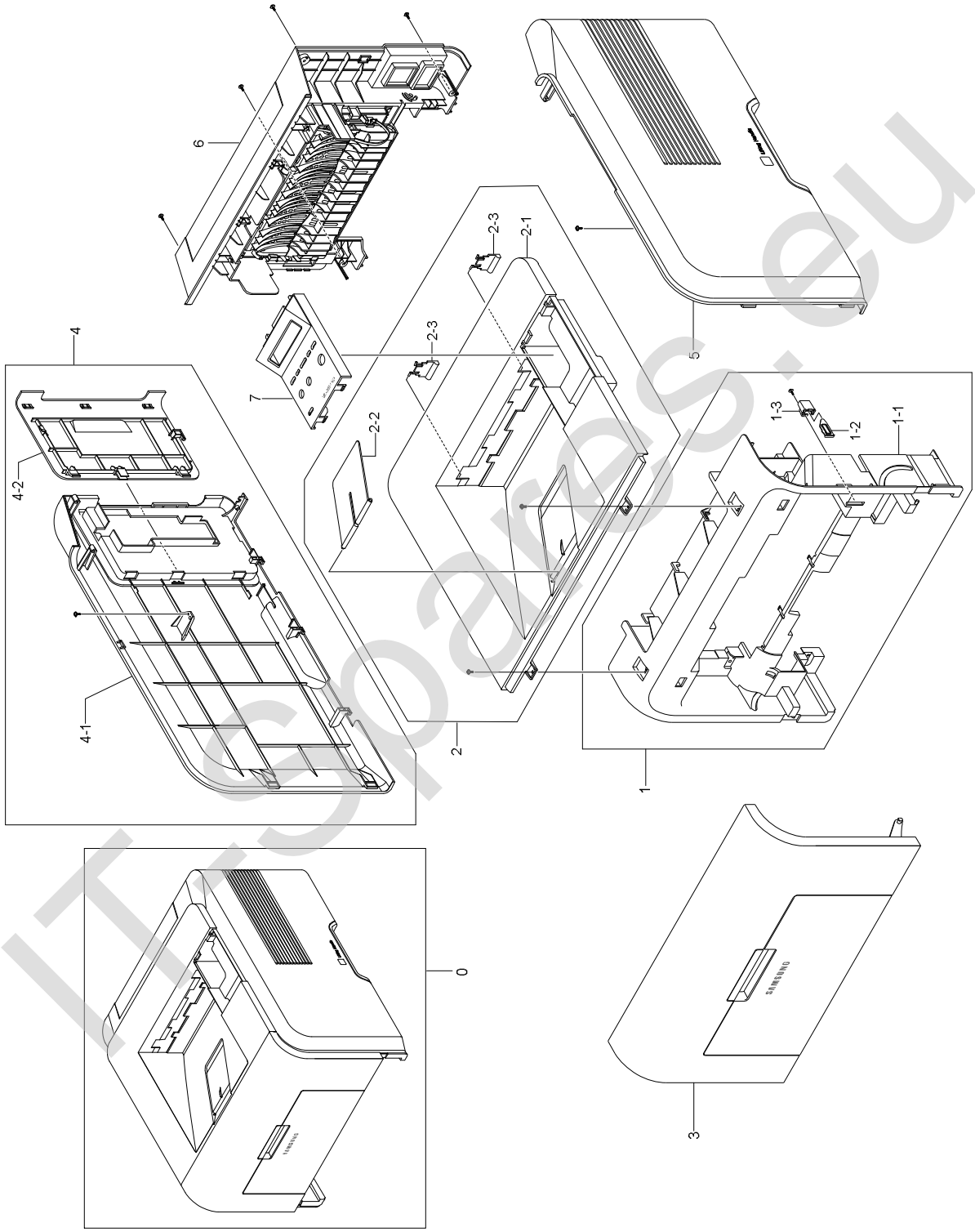

ITSpares.eu

7.3 Front Cover Ass'y

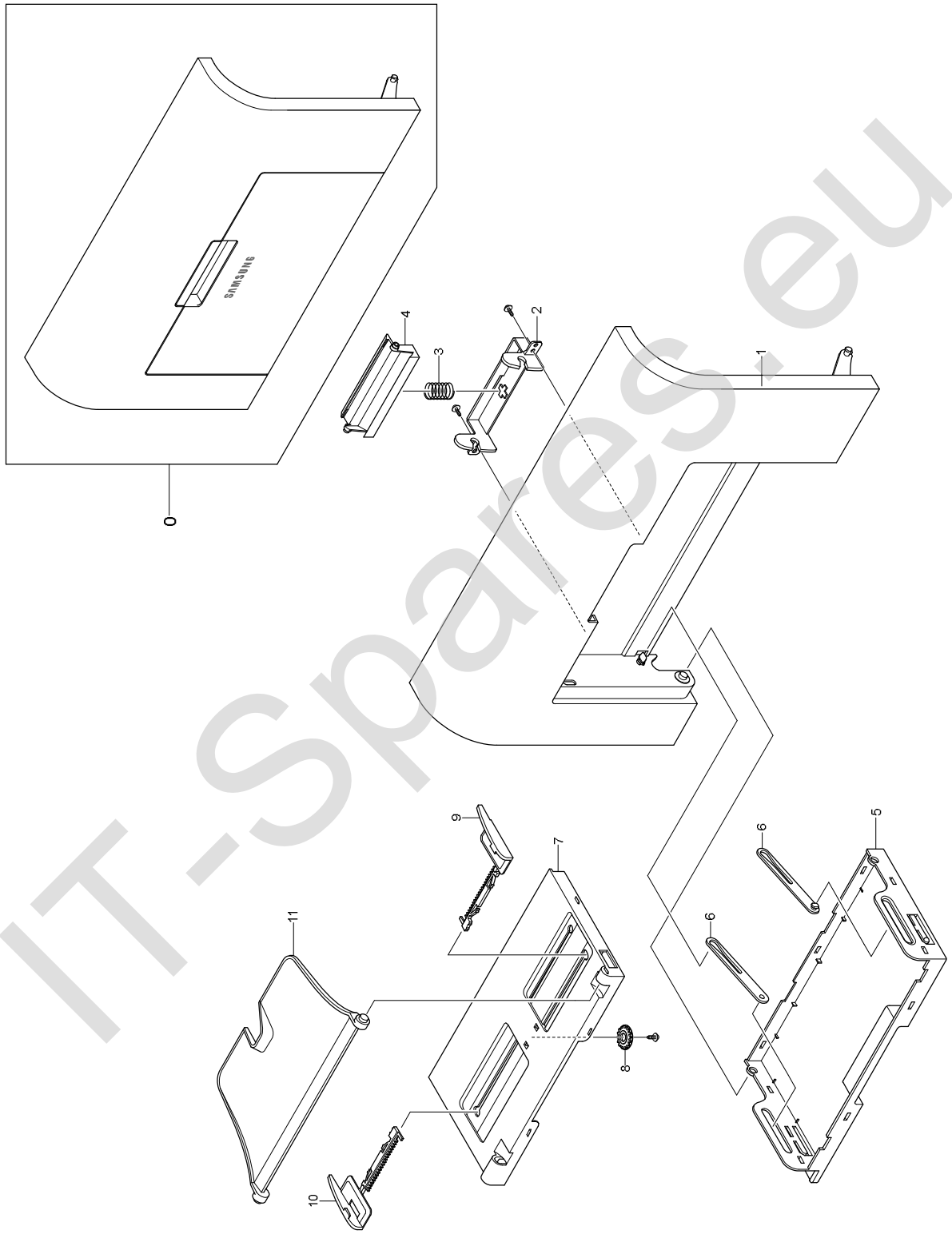

IT-Spares.eu

7.4 Rear Cover Ass'y

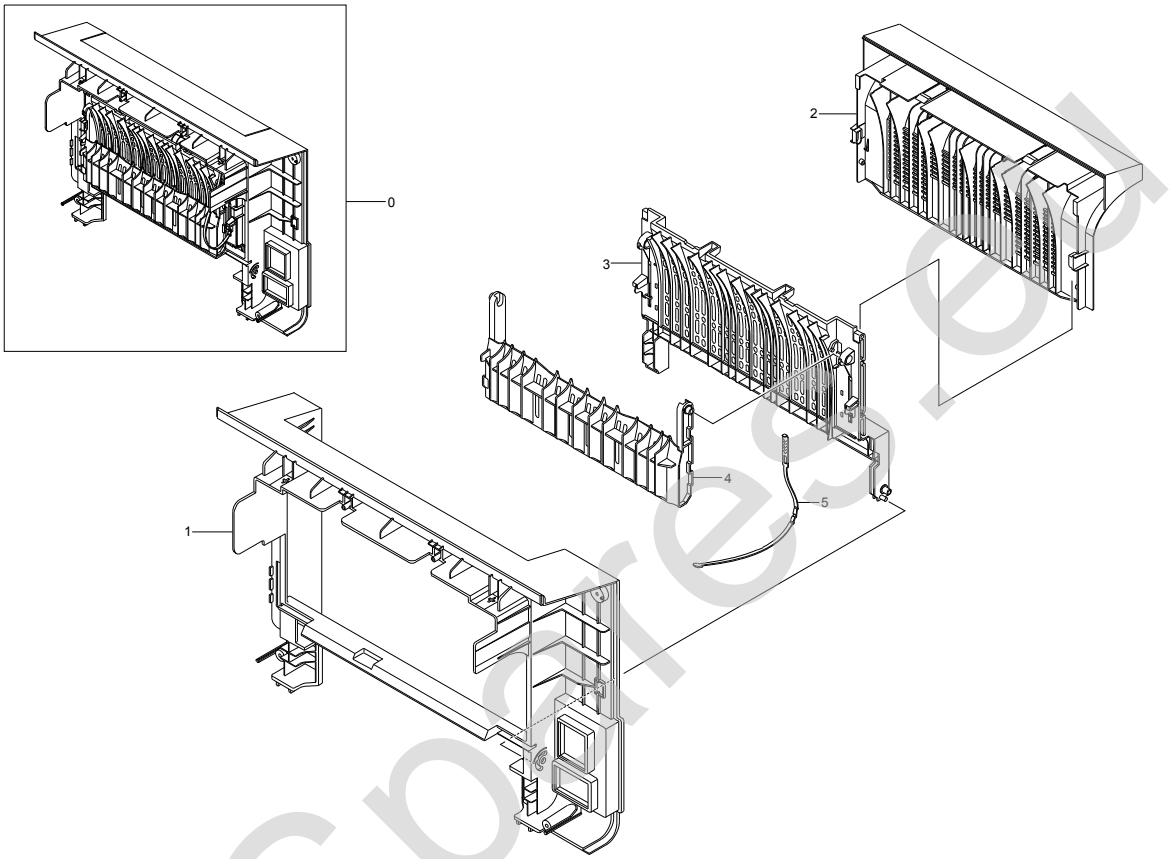

IT-Spares.eu

7.5 OPE Cover Ass'y

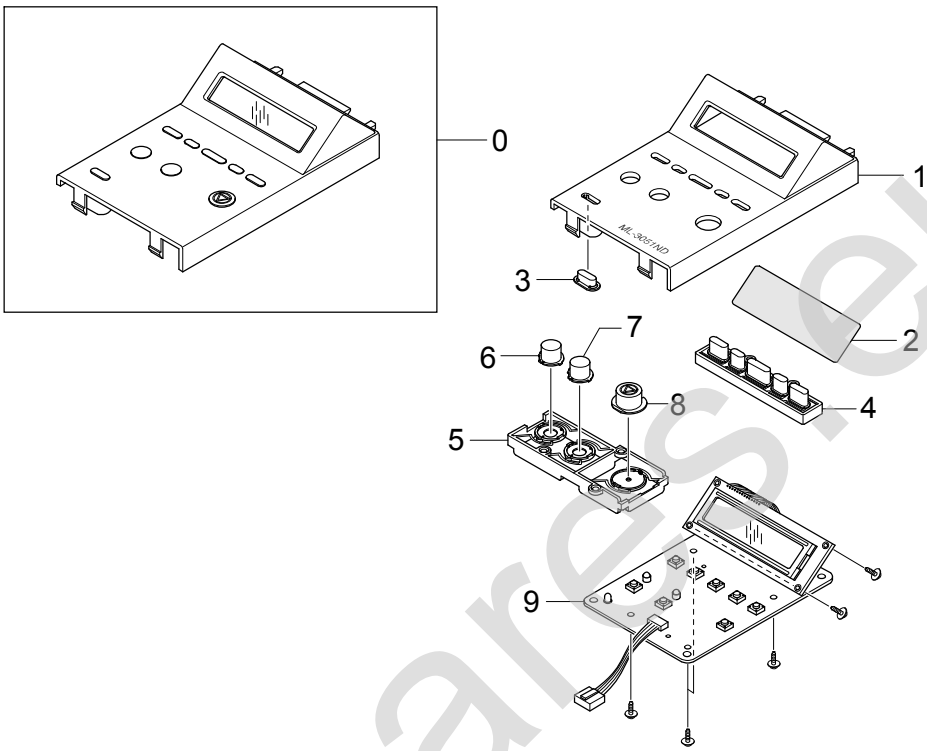

IT-Spares.eu

7.6 Frame

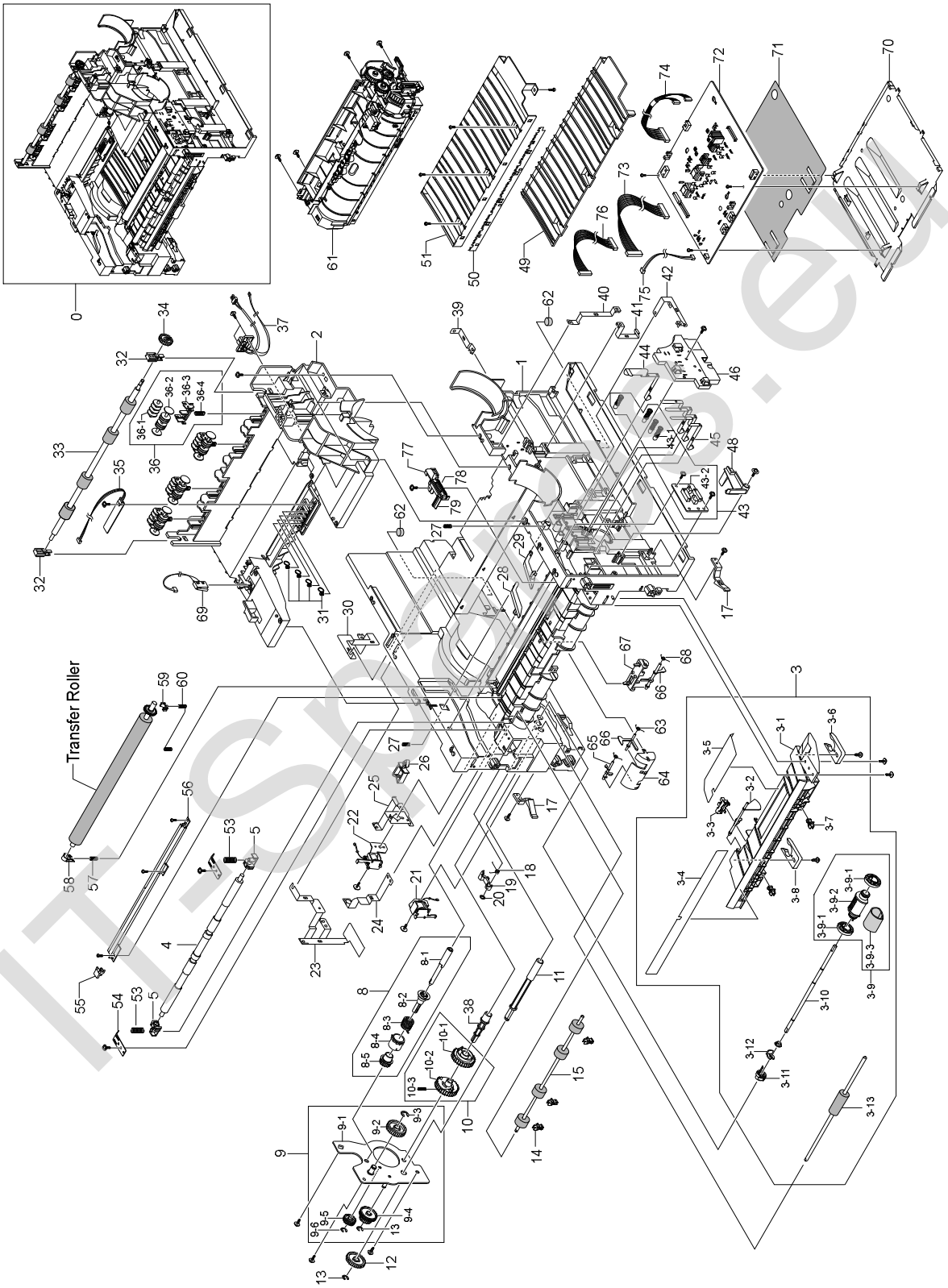

IT-Spares.eu

7.7 MP Ass'y

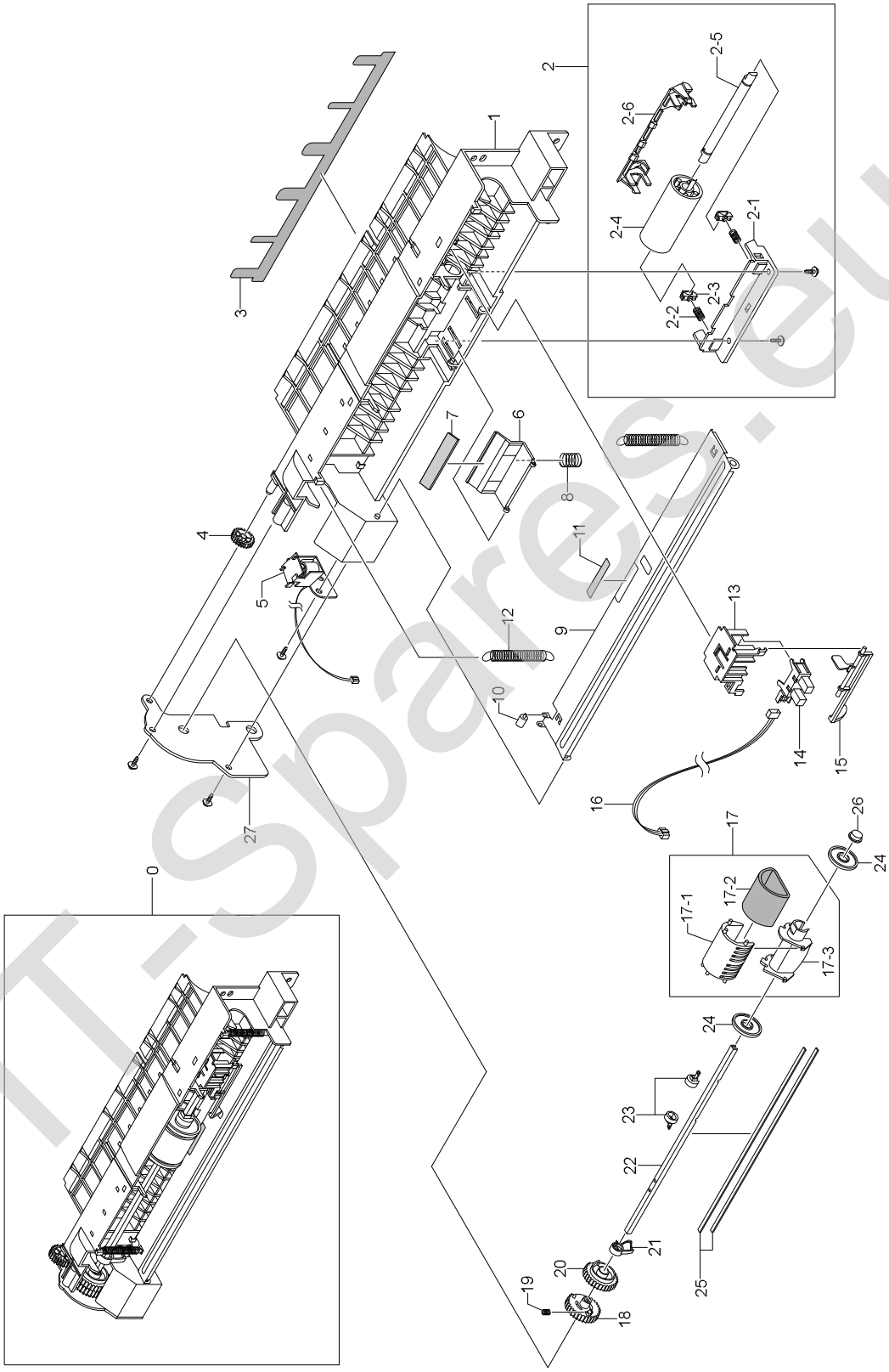

IT-Spares.eu

7.8 Main Drive Ass'y

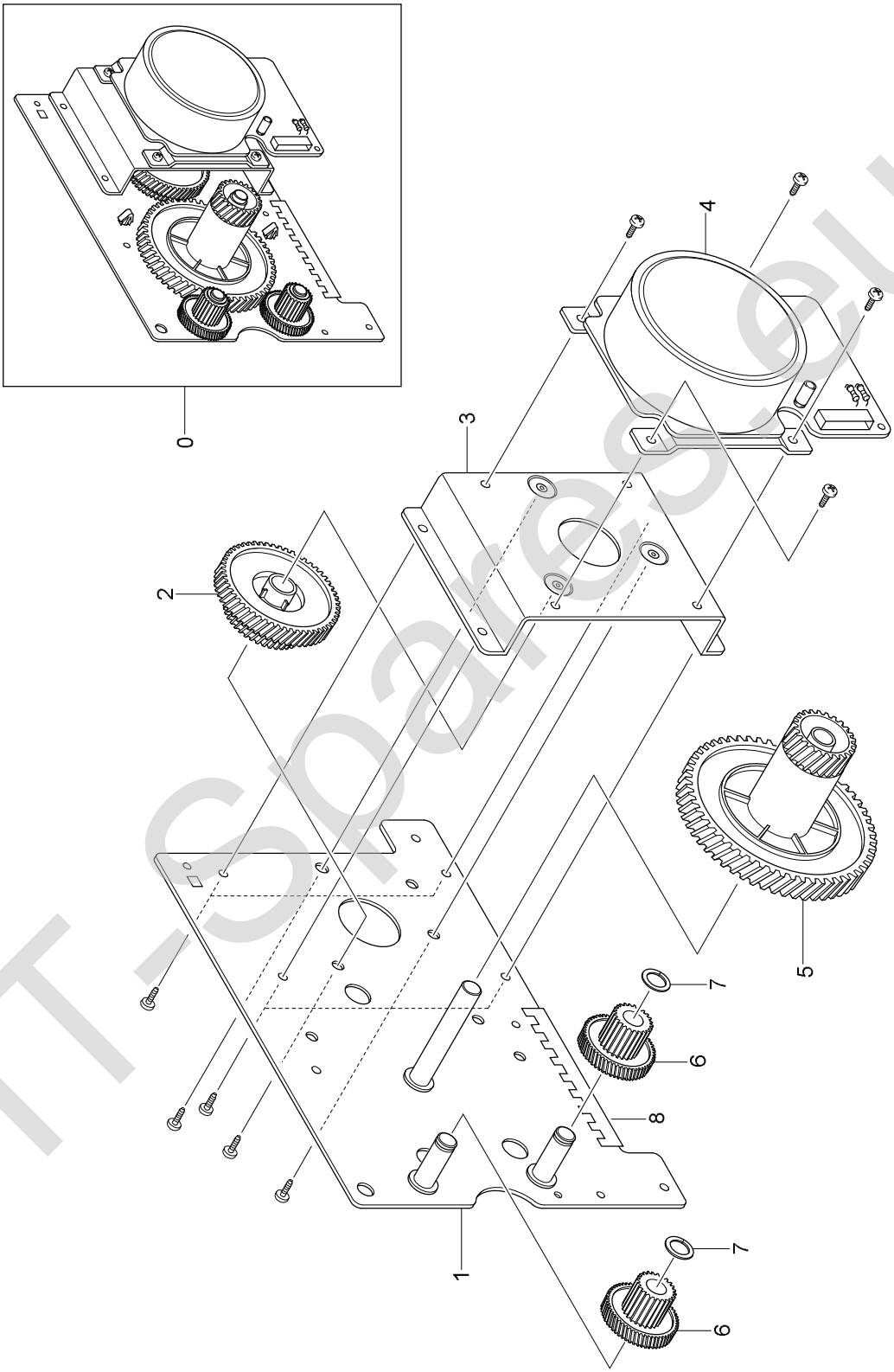

IT-Spares.eu

7.9 Fuser Drive Ass'y

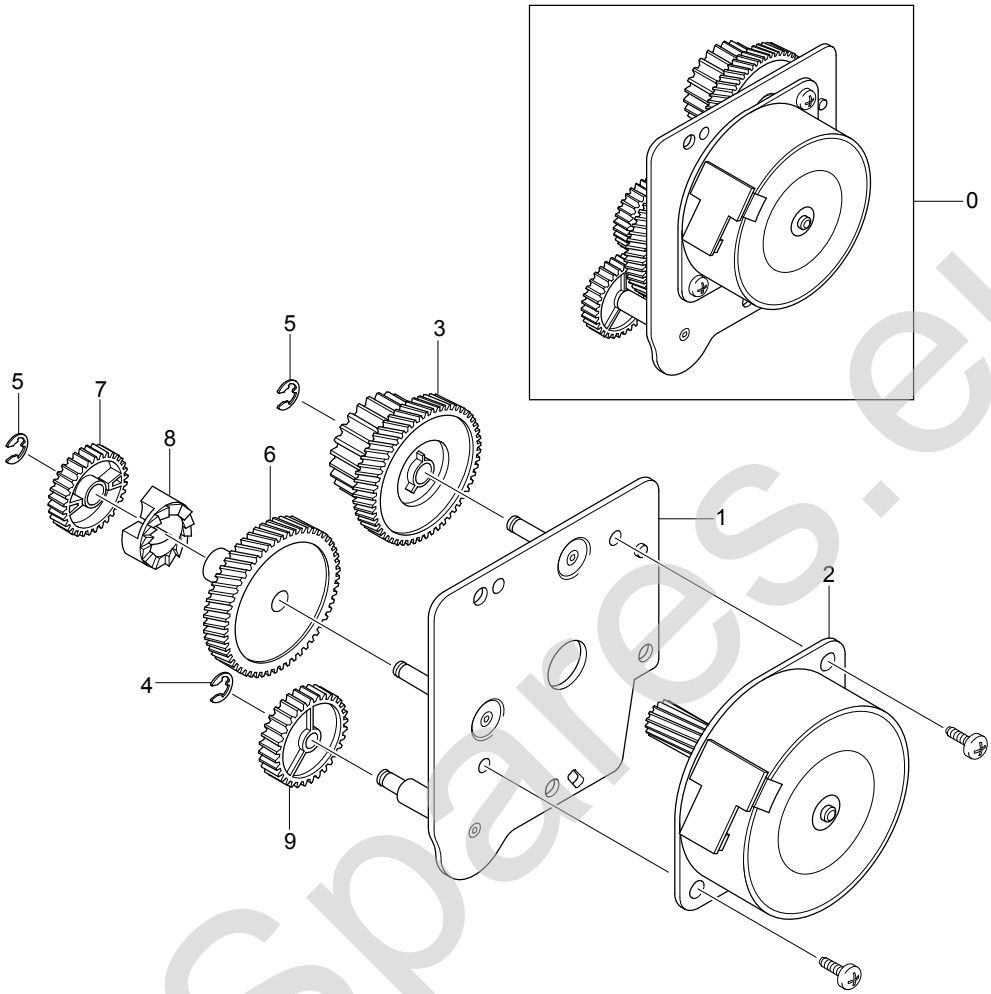

IT-Spares.eu

7.10 Duplex Unit (Optional)

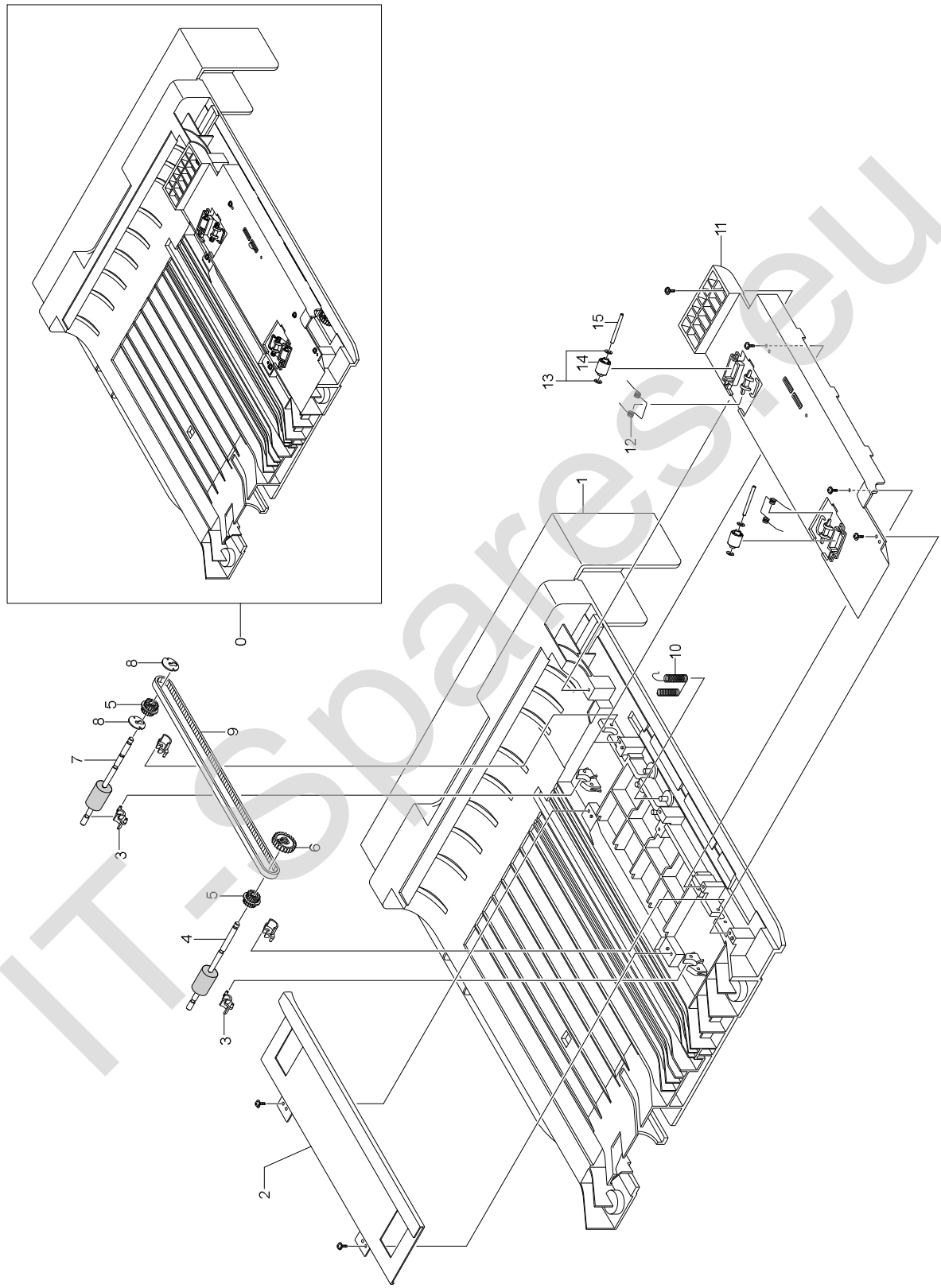

IT-Spares.eu

7.11 Fuser Unit

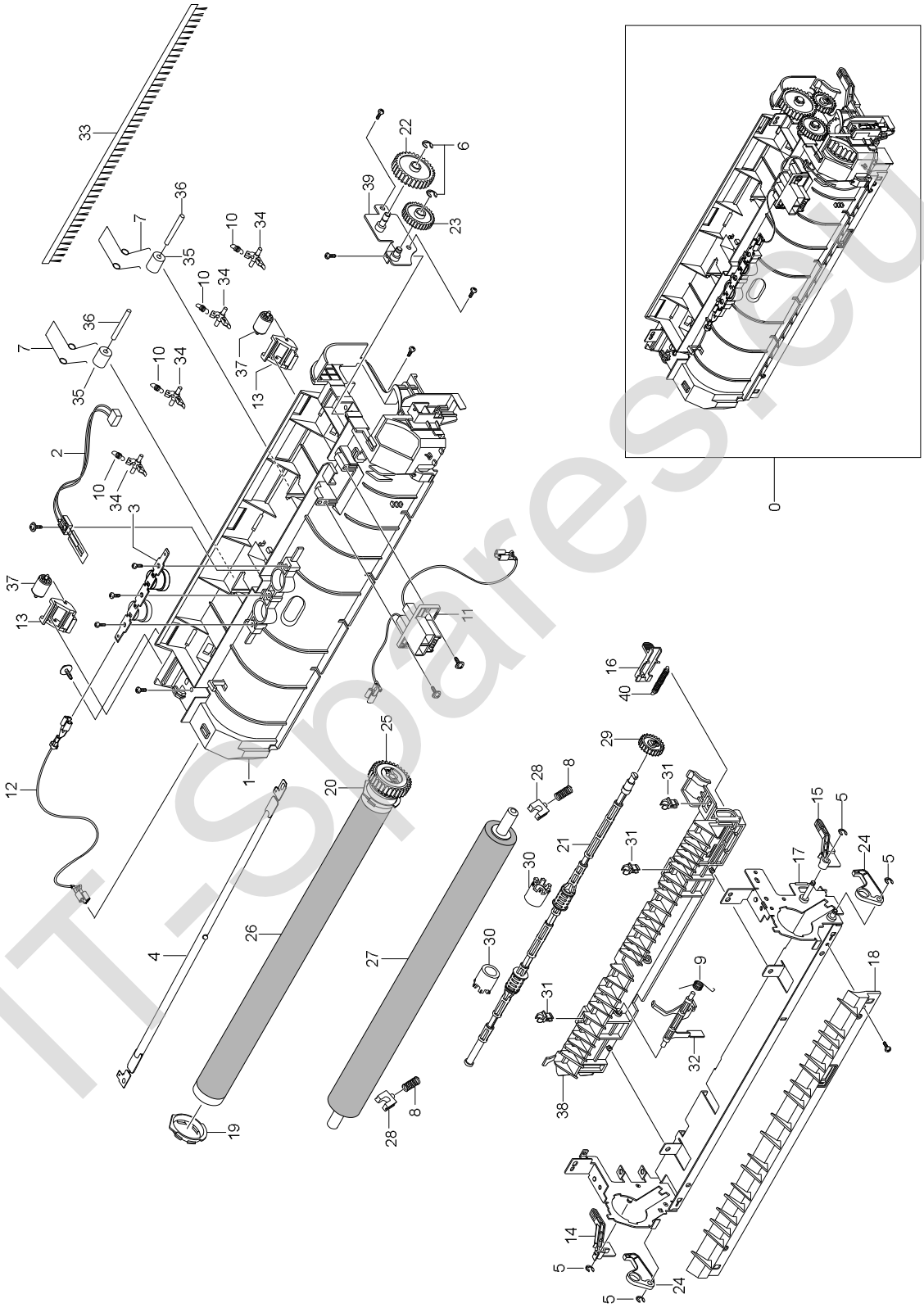

IT-Spares.eu

7.12 Cassette Unit

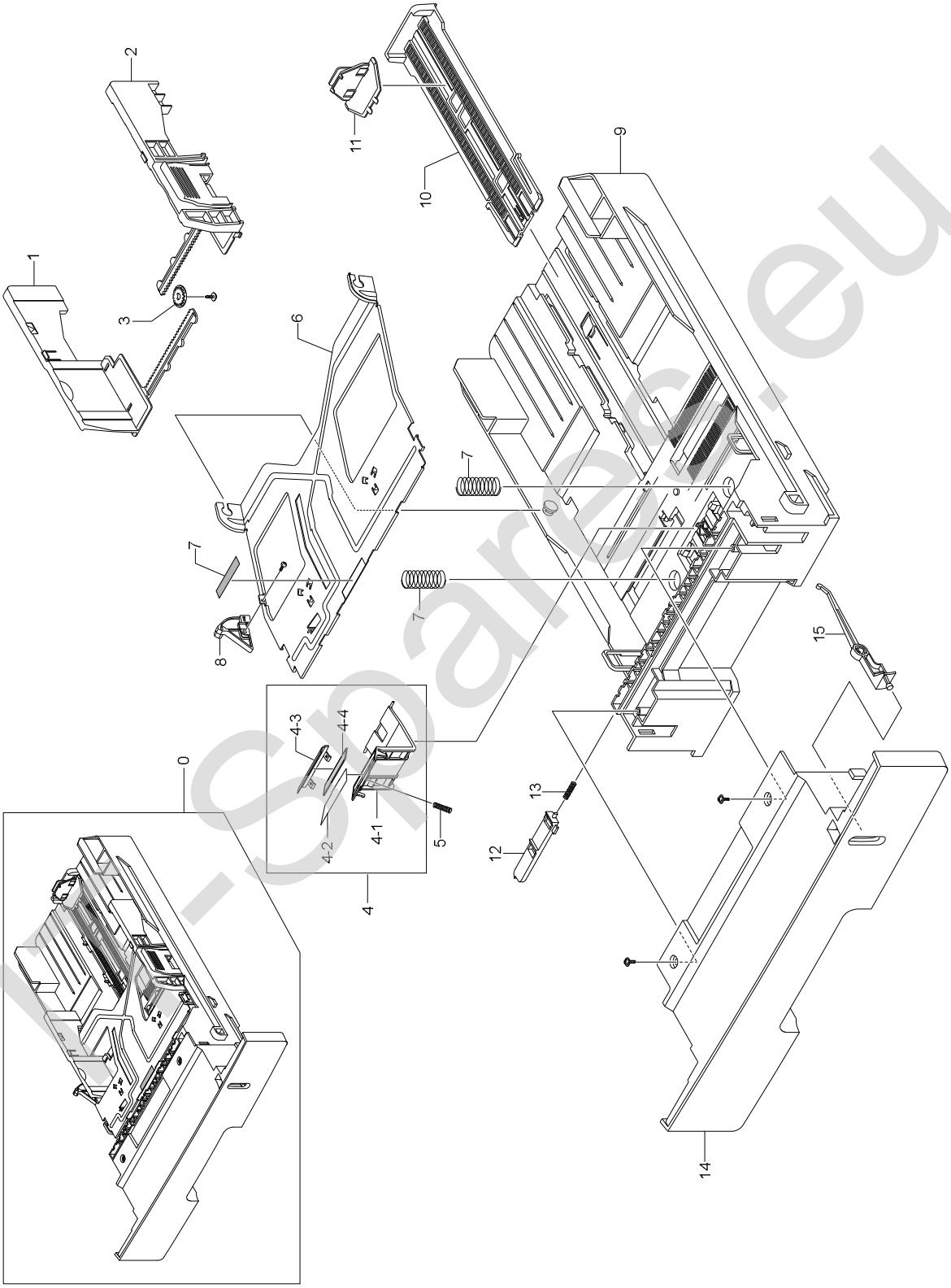

K-Spares.eu

Service Parts List (Model code : ML-3050/SEE)

SA : SERVICE AVAILABLE SNA : SERVICE not AVAILABLE

Drawer#	SEC-Code	Description & Specification	Location	Service
7.1-1	JC96-03992A	ELA HOU-FRAME 220V;ML-3051ND,-,-,220V LA	D2103	SA
7.1-10	JC63-00962A	SHEET-INSULATOR_PBA;ML-3051ND,PC V2,0.5T		SNA
7.1-11	JC92-01796B	PBA MAIN-CONTROLLER;ML-3050,SEC,-,110V/2		SA
7.11-1	JC63-01005A	COVER-M_FUSER;SCX-5525DN,PET+GF30%,-,46,		SNA
7.11-10	6107-001291	SPRING-ES;SUS304-WPB,NTR,PI0.12,D2.48,L8		SNA
7.11-11	JC39-00520A	CBF HARNESS-FUSER CON;SCX-5530FN,CBF,UL3	D2131	SA
7.11-12	JC39-00609A	CBF HARNESS-FUSER R 2;SCX-5530FN,CBF,UL3	D2135	SA
7.11-13	JC61-00785A	HOLDER-M-IDLE ROLLER;ML-2150,PC,-,-,-,BL	H4027	SA
7.11-14	JC61-01305A	HOLDER-M_JAM L;ML-2550,PC+GF20%,T1.5,12.		SNA
7.11-15	JC61-01306A	HOLDER-M_JAM R;ML-2550,PC+GF20%,T1.5,13.		SNA
7.11-16	JC61-01625A	HOLDER-M_REAR_LEVER;SCX-5530FN,PC,NH-102		SNA
7.11-17	JC61-01632A	FRAME-P-FUSER;SCX-5530FN,SECC,-,-,-,1.2,		SNA
7.11-18	JC61-01628A	GUIDE-M_INPUT;SCX-5530FN,PET+GF30%,2,29.		SNA
7.11-19	JC61-01629A	BUSH-M HR R;SCX-5530FN,PPS(RFKB-9),28.9,		SNA
7.11-2	1404-001364	THERMISTOR-NTC ASSY;7KOHM,-,3370K,0.3MW/		SNA
7.11-20	JC61-01631A	BUSH-M_HR L_LAMP;SCX-5525DN,PPS(RFKB-9),		SNA
7.11-21	JC66-00402A	SHAFT-M-EXIT_F/UP;ML-2150,PBT+GF30%,-,-,	S4119	SA
7.11-22	JC66-00425A	GEAR-IDLE 33;ML-2150,RAL4032,1.0,33,8,YE	G0268	SA
7.11-24	JC66-00957A	LEVER-M_LINK JAM;ML-2550,PET+GF30%,T1.5M		SNA
7.11-25	JC66-01192A	GEAR-M_FUSER;SCX-5525DN,PPS(OFL4036),1,3		SNA
7.11-26	JC66-01194A	ROLLER-HEAT;SCX-5525DN,AL5052 PIPE T0.9M		SNA
7.11-27	JC66-01195A	ROLLER-PRESSURE;SCX-5530FN,LSR+PFA,32,25		SNA
7.11-28	JC66-10901A	BEARING-PRESSURE/R;ML-165,PPS(RBA313N),-	O1091	SA
7.1-13	JC97-02652A	MEA-TRANSFER ROLLER;SCX-5530FN,-,-,ELBER	D2128	SA
7.11-3	4712-001031	THERMOSTAT;125/250VAC,15/7.5A,170+-5C,0C	D2129	SA
7.11-30	JC70-20901A	IEX-SHAFT IDLE,F/UP;ML-5000A,SUS304,-,PI	D2149	SA
7.1-13-1	JC66-01181A	ROLLER-TRANSFER;SCX-5530FN,SUS303+NBR,15	D2146	SA
7.11-31	JC72-00382A	PMO-BUSHING TX;ML-6060A,POM M9044,BLK,-,		SNA
7.1-13-2	JC66-00395A	GEAR-TRANSFER;ML-1710,POM(M90-44),-,-,-,	G0448	SA
7.11-32	JC66-01284A	ACTUATOR-EXIT;SCX-5530FN,PBT+GF30,2,3,57	D2147	SA
7.11-33	JC75-00095A	MEC-BRUSH ANTISTATIC;ML-6060A,SEC,NTR	M0022	SA
7.11-34	JC72-41128B	PMO-GUIDE CLAW GREEN;SCX-5530FN,PEEK,BLK	D2152	SA
7.11-35	JC73-40909B	RMO-RUBBER EXIT_F/UP;ML-2150,EPDM,¡Ë12 XS		SNA
7.11-36	JC72-20902A	PEX-ROLLER F/UP(2);ML-5000A,TEFLON,WHT,-	O1106	SA
7.11-37	JC72-40981A	PMO-ROLLER UPPER DP;ML-165,POM,WHT,HB,-	K4068	SA
7.11-38	JC61-01633A	GUIDE-M_REAR;SCX-5530FN,PET+GF30%,-,-,24		SNA
7.11-39	JC61-01627A	BRACKET-P-FUSER;SCX-5530FN,SECC,T1.2,-,-		SNA
7.1-14	JC59-00027A	UNIT-LSU;SCX-5530FN,-,-,DUAL,SINGLE LD,4	D2115	SA
7.11-4	4713-001208	LAMP-HALOGEN;230V,-,800W,-,-,-,6X284MM	D2130	SA
7.1-15	JC97-02444E	MEA-COVER;ML-3050/SEE,-,-,BLUE ANGEL MOD		SNA
7.1-16	JC96-03979A	ELA UNIT-INITIAL DEVE;ML-3050/SEE,-,-,IN		SNA
7.1-17	JC97-02415A	MEA UNIT-CASSETTE;ML-3051N,-,-,DOVE,-,-,	D2106	SA
7.11-7	6107-001159	SPRING-TS;SUS304,-,PI0.45,D3.85,L20,-,W1	Z4394	SA
7.11-8	6107-001193	SPRING-CS;SUS304-WPB,YEL,PI1.1,D6.1,L19.	S0032	SNA
7.11-9	JC61-70903A	SPRING ETC-ACTUATOR;ML-165,SUS304,PI0.2,	Z4132	SA
7.1-2	JC96-03761A	ELA UNIT-MAIN DRIVE;SCX-5530FN,SEC,-,-,-	D2101	SA
7.12-12	JC72-00972A	PMO-PLATE_LOCKER;ML-1710,POM(M90-44),WHT	L6051	SA
7.12-13	JG61-70531A	SPRING ETC-LOCKER,PLATE;SF6000,STS304WPB	S0025	SA
7.1-24	JC39-00529A	CBF HARNESS-EXIT MTR;SCX-5530FN,CBF,UL 1	D2134	SA
7.12-4	JC97-01931A	MEA UNIT-HOLDER PAD;SCX-4920N,DELL,-,HOL	P0014	SA
7.12-4-1	JC61-00580A	HOLDER-M-PAD;ML-1710,PC+ABS(NH-1023P),-,	P0034	SA
7.12-4-2	JC63-00407A	SHEET-HOLDER PAD R2;SCX-4920N,PC,0.125T,		SNA

ITSERVICE.eu

SA : SERVICE AVAILABLE SNA : SERVICE not AVAILABLE

Drawer#	SEC-Code	Description & Specification	Location	Service
7.12-4-3	JC70-00314A	IPR-PLATE PAD;ML-1710,SUS304-CSP,-,0.1,-	P0009	SA
7.1-25	JC39-00527A	CBF HARNESS-MAIN MTR;SCX-5530FN,CBF,UL 1	D2111	SA
7.12-6	JC61-00603A	PLATE-P-KNOCK_UP;ML-1710,SECC,1,250.7,16		SNA
7.1-27	JC63-00913A	SHIELD-P-SMPS;SCX-5530FN,SECC,0.8,191.76		SNA
7.12-7	6107-001166	SPRING-CS;SUS304-WPB,-,PI0.65,D12.65,L59	Z4199	SA
7.1-28	JC39-00523A	CBF HARNESS-AC INLET;SCX-5530FN,CBF,UL16	D2110	SA
7.12-8	JC66-00719A	CAM-M-KNOCK UP;ML-1750,POM(KOLON K700),-		SNA
7.1-29	6502-000132	CABLE CLAMP;DAWS-1NE,ID11,L21.0,NTR,NYLO	C0069	SA
7.12-9	JC61-00876A	FRAME-M CASSETTE;SF-755P,HIPS,HR-1360,HB		SNA
7.1-3	JC96-03837A	ELA HOU-MPF;SCX-5530FN,-,-,-,-,-,-	D2156	SA
7.1-30	JC63-00960A	SHEET-INSULATOR_SMPS;SCX-5530FN,PC V0,0.		SNA
7.1-31	JC44-00090A	SMPS-PSP_TYPE3_V2C;SCX-4521F,*,AC/DC,-,2	D2114	SA
7.1-32	3903-000042	CBF-POWER CORD;DT,EU,FP3/YES,IEC320 C13/	C0022	SA
7.1-6	JC31-00025A	FAN-DC;AD0624MSA70GL(R1)DOL,CLP-500,PBT+	F0002	SA
7.1-7	JC31-00025B	FAN-DC;AD0624MS-A70GL,SCX-6345N/XRX,PBT+	D2107	SA
7.1-8	JC96-03866A	ELA HOU-FUSER DRIVE;SCX-5530FN,-,-,ELBER		SNA
7.1-9	JC97-02697A	MEA-SHIELD CONTROLLER;ML-3051ND,-,-,-,-,		SNA
7.2-1	JC97-02399A	MEA-COVER MIDDLE;ML-3051ND,-,-,DOVE,-,-,	D2126	SA
7.2-1-2	JC72-01339A	PMO-M-SUB ACTUATOR;ML-2250,POM,-,46.3*20	A0004	SNA
7.2-2	JC97-02442A	MEA-COVER TOP;ML-3051ND,-,-,DOVE,-,-,-	D2127	SA
7.2-2-3	JC72-01001A	PMO-SUB STACKER;ML-1400,PC,-,32*4.8*25.5	O1104	SA
7.2-3	JC97-02396A	MEA-COVER FRONT;ML-3051ND,-,-,DOVE,-,-,-	D2123	SA
7.2-4	JC97-02397A	MEA-COVER SIDE L;ML-3051ND,-,-,DOVE,-,-,	D2124	SA
7.2-6	JC97-02398C	MEA-COVER REAR;ML-3050/SEE,-,-,BLUE ANGE		SA
7.2-7	JC96-03831A	ELA HOU-COVER OPE;ML-3050,-,-,DOVE,-,-,-		SA
7.3-3	JG61-70549A	SPRING ETC-CIS(C2);SF4400,SUS304WPB,D11.	C5029	SA
7.3-6	JC63-00444A	TRAY-M-LINK MP;ML-2250,PC,2,74.9,9.3,-,-	T4137	SA
7.3-8	JG66-40003A	GEAR-PINION;SF4000,POM,WHT,M1,Z16	O1127	SA
7.4-1	JC63-00978D	COVER-REAR;ML-3050/SEE,PC+ABS,2.5,366.2,		SNA
7.4-4	JC61-01583A	GUIDE-OUTPUT FUSER;SCX-5530FN,PC,2.5,248		SNA
7.4-5	JC61-01653A	STOPPER-M-STRAP;SCX-5530FN,PE BOX 7033,T		SNA
7.5-8	6003-000196	SCREW-TAPTITE;PWH,+,B,M3,L10,NI PLT,SWRC	Z4397	SA
7.5-8	6003-000221	SCREW-TAPTITE;PWH,+,S,M4,L8,ZPC(YEL),SWR		SNA
7.5-8	6003-000261	SCREW-TAPTITE;BH,+,B,M3,L6,ZPC(YEL),SWRC		SNA
7.5-8	6003-000269	SCREW-TAPTITE;BH,+,-,S,M3,L6,ZPC(YEL),SW		SA
7.5-8	6003-000301	SCREW-TAPTITE;BH,+,S,M4,L6,ZPC(YEL),SWRC		SNA
7.5-8	6003-001256	SCREW-TAPTITE;BH,+,B,M4,L10,NI PLT,SWRCH		SNA
7.5-8	6003-000282	SCREW-TAPTITE;BH,+,-,B,M3,L8,ZPC(BLK),SW		SA
7.5-8	6006-001078	SCREW-TAPTITE;WSP,PH,+,M3,L10,ZPC(YEL),S		SNA
7.5-9	6003-000264	SCREW-TAPTITE;PWH,+,-,B,M3,L6,ZPC(YEL),S		SNA
7.6-1	JC61-01620A	FRAME-M BASE;SCX-5530FN,PC+ABS,-,V0,BLK,		SNA
7.6-10	JC97-02648A	MEA UNIT-GEAR PICK UP;SCX-5530FN,-,-,-,-	D2157	SA
7.6-10-1	JC66-01183A	GEAR-PICK UP_INNER;SCX-5530FN,POM,0.8,33		SNA
7.6-10-2	JC66-01184A	GEAR-PICK UP_OUTER;SCX-5530FN,POM,0.8,33		SNA
7.6-10-3	6107-001167	SPRING-CS;SUS304-WPB,-,PI0.25,D3.25,L9.6	Z4318	SA
7.6-11	JC66-01160A	SHAFT-M_FEED2;SCX-5530FN,POM(M90-44),72.		SNA
7.6-12	JC66-01165A	GEAR-FEED2 Z27;SCX-5530FN,POM,0.8,Z27,W4		SNA
7.6-13	6044-000001	RING-CS;ID3,OD3,T0.25,BLACK,SUS304		SNA
7.6-15	JC66-00526A	ROLLER-FEED ROLLER 1;ML-1510,SUM24L+NI+E	F6201	SA
7.6-17	JC72-00983A	PMO-LOCKER CST;ML-1710,POM(DELIN 900P),W	L6030	SA
7.6-18	6107-001170	SPRING-TS;SWP-B,-,PI0.9,D6.0,-,-,-,ID5.2	Z4162	SA
7.6-19	JC66-00377A	CAM-M-PICK UP;ML-1710,POM(DELIN 8903),-,	P2042	SA
7.6-2	JC61-01621A	FRAME-M_EXIT;SCX-5530FN,PC,-,V0,BLK,2.5,		SNA
7.6-21	JC33-00010A	SOLENOID-HB (MANUAL);-,ML-1510,DC24V,-,-	S8015	SA
7.6-22	JC33-00014A	SOLENOID-FEED ROCKY2;-,SCX-4920,-,-,-,-,	P2162	SA
7.6-23	JC63-00917A	GROUND-P-DRIVE;SCX-5530FN,SUS301-1/2H,0.		SNA

ITCSS.eu

SA : SERVICE AVAILABLE SNA : SERVICE not AVAILABLE

Drawer#	SEC-Code	Description & Specification	Location	Service
7.6-24	JC63-00923A	GROUND-P-PUSH BUSHING;SCX-5530FN,C5210P,		SNA
7.6-25	JC63-00922A	GROUND-P-DRIVE2;SCX-5530FN,SUS301-1/2H,0		SNA
7.6-26	6502-001093	CABLE CLAMP;DAWS-3NE,ID11*L34.8,-,NYLON6	C0002	SA
7.6-27	JC61-70932A	SPRING ETC-GUIDE DEVE;ML-5000A,-,D4.3,-,	Z4159	SA
7.6-28	JC72-00984A	PMO-PLATE GUIDE DEVE_L;ML-1710,POM(M90-4	G2285	SA
7.6-29	JC72-00985A	PMO-PLATE GUIDE DEVE_R;ML-1710,POM(M90-4	G2286	SA
7.6-3	JC96-03829A	ELA HOU-GUIDE DUP F;SCX-5530FN,-,-,ELBER	D2155	SA
7.6-30	JC63-00926A	GROUND-P-SHIELD;SCX-5530FN,C5210P,0.2,40		SNA
7.6-31	JC65-00019A	TERMINAL-CRUM;SCX-5530FN,SUS304WPB,-,-,P	D2144	SA
7.6-3-1	JC61-01600A	GUIDE-M_FRONT DUPLEX;SCX-5530FN,PC-GF20,		SNA
7.6-3-10	JC66-01171A	SHAFT-PICK UP;SCX-5530FN,SUM22+NI,130.0,		SNA
7.6-3-11	JC72-41364A	PMO-BUSHING_P/U,MP;ML-6100,POM,BLACK,-,C	P0035	SA
7.6-3-12	JC66-00050A	CAM-CATCH;ML-9400W,POM,-,34¡¿18¡¿7,WHITE S	C0004	SA
7.6-3-13	JC66-01173A	ROLLER-FEED;SCX-5530FN,EPDM+SUM22+NI,13.	D2170	SA
7.6-32	JC61-00829A	HOLDER-BEARING EXIT F/DOWN;SCX-4216F,POM	H4009	SA
7.6-3-2	JC66-01187A	LEVER-ACTUATOR EMPTY;SCX-5530FN,PC,?3,-,	D2171	SA
7.6-33	JC66-01196A	ROLLER-EXIT F/DOWN;SCX-5530FN,SUM22 + EP		SNA
7.6-3-3	0604-001095	PHOTO-INTERRUPTER;TR,90%,150mW,DIP-4,BK	P0013	SA
7.6-34	JC66-40209A	GEAR-EXIT;ML-80,POM,-,-,-,WHT,-,-,-	D2148	SA
7.6-3-4	JC63-01095A	SHEET-GUIDE DUP_OUT;SCX-5530FN,PET,0.188		SNA
7.6-35	JC92-01829A	PBA SUB-TERMINAL;SCX-5530FN,SEC,-,-,-,-,	Z4319	SA
7.6-3-5	JC63-00992A	SHEET-GUIDE FRONT DU;SCX-5530FN,PET,0.18		SNA
7.6-36	JC97-01034A	MEA RACK-EXIT ROLLER;ML-1605,SUMSUNG,KOR	E4060	SA
7.6-3-6	JC66-01170A	CAM-SHAFT PICK UP;SCX-5530FN,POM(M9044),		SNA
7.6-36-1	JC72-41008A	PMO-ROLLER FD R;ML-165,POM,BLACK,-,-,-	P0049	SA
7.6-36-2	JC72-41007A	PMO-ROLLER FD F;ML-165,POM,BLACK,-,-,-,-	P0048	SA
7.6-36-3	JC72-41006A	PMO-HOLDER EXIT ROLL;ML-165,PC,BLK,HB,-	E4126	SA
7.6-36-4	JC61-70911A	SPRING ETC-EXIT ROLL FD;ML-165,SUS304 WP	O1053	SA
7.6-37	JC39-00522A	CBF HARNESS-FUSER AC;SCX-5530FN,CBF,UL31	D2132	SA
7.6-3-7	JC72-00382B	PMO-BUSHING FEED;ML-1710,POM(DERLIN 8903	O1102	SA
7.6-38	JC61-01602A	HOLDER-M_PICK UP;SCX-5530FN,POM,-,-,41.8		SNA
7.6-3-8	JC61-01367A	FIXER-M_E RING 4PI;SCX-6345N/XRX,POM,T1.		SNA
7.6-39	JC63-00920A	GROUND-P-FUSER;SCX-5530FN,SUS301-1/2H,0.		SNA
7.6-3-9	JC97-02441A	MEA-ROLLER PICK UP;SCX-5530FN,-,-,ELBERT	D2175	SA
7.6-3-9-1	JC66-01169A	ROLLER-IDLE PICK UP;SCX-5530FN,POM,28.5,	D2181	SA
7.6-3-9-2	JC61-01601A	HOUSING-M_PICK UP;SCX-5530FN,PC+ABS,-,17	D2178	SA
7.6-3-9-3	JC66-01168A	ROLLER-PICK UP;SCX-5530FN,EPDM+IR,25.0,2	D2180	SA
7.6-4	JC66-00527A	SHAFT-FEED IDLE;ML-1510,SUM24L+NI,223,8,	F6209	SA
7.6-40	JC63-00925A	GROUND-P-MOTOR FUSER;SCX-5530FN,C5210P,0		SNA
7.6-41	JC63-00924A	GROUND-P-SHIELD SMPS;SCX-5530FN,C5210P,0		SNA
7.6-42	JC63-00921A	GROUND-P-GUIDE TR;SCX-5530FN,C5210P,0.2,		SNA
7.6-43	JC75-00049A	MEC-TERMINAL;SF-5100,SAMSUNG,-,-,-,-,-,-	K3739	SA
7.6-43-1	JC61-00035A	SPRING ETC-HV APOLLO;SF-5100,SUS304WPB,0		SNA
7.6-43-2	JC70-00050A	IPR-TERMINAL;SF-5100,SWRCH1018,-,-,-,-,8		SNA
7.6-44	JC65-00014A	TERMINAL-P-HV CR;SCX-5530FN,SUS301-CSP 3		SNA
7.6-45	JC70-00312A	IPR-P-TERMINAL CON;ML-1710,SUS304-CSP,-,	K3385	SA
7.6-46	JC61-01584A	HOUSING-M_TERMINAL;SCX-5530FN,ABS(NH-100		SNA
7.6-47	JC92-01828A	PBA SUB-CONNECTION;SCX-5530FN,SEC,-,-,-,	D2154	SA
7.6-48	JC72-00974A	PMO-ACTUATOR CVR OPEN;ML-1710,PC V0(NH10	O1073	SA
7.6-49	JC61-01746A	GUIDE-TR RIB;SCX-5530FN,PC+ABS,-,78.9,23		SNA
7.6-5	JC61-00585A	BUSH-M-FEED IDLE;ML-1710,POM(CF620-GF20%	F6043	SA
7.6-50	JC61-00604B	PLATE-E_SAW;SF-755P,SUS304-CSP 1/2H,0.1,	P5152	SA
7.6-51	JC61-00607A	GUIDE-P-TR;ML-1710,SECC,0.5,239.1,76.4,-	G2089	SA
7.6-53	JC61-70958A	SPRING ETC-TR;ML-5000A,SUS304 WPB,PI0.55	Z4163	SA
7.6-54	JC61-00914A	PLATE-P-PUSH BUSHING;SCX-4920N,SECC,0.8,	K3234	SNA
7.6-55	JC61-00907A	HOLDER-M-PTL R2;SCX-4920N,PC(NH-1023P),1	H4041	SA

ITCRESS.EU

SA : SERVICE AVAILABLE SNA : SERVICE not AVAILABLE

Drawer#	SEC-Code	Description & Specification	Location	Service
7.6-56	JC70-00307A	IPR-P-EARTH TRANSFER;ML-1710,SECC,-,1.0T	O1094	SA
7.6-57	JC61-00047A	SPRING ETC-TR L HAWK;ML-6060A,SWP-B,-,-	O1030	SA
7.6-58	JC61-00588A	BUSH-M-TR L;ML-1710,POM(M90-44),-,-,-,BL	K2886	SA
7.6-59	JC72-00102A	PMO-BUSHING_TR(L);SF-5100,POM (CH-15),BL	O1101	SA
7.6-60	JC65-00018A	TERMINAL-TR;SCX-5530FN,STS304WPB,-,-,PI		SNA
7.6-61	JC96-03965A	ELA UNIT-FUSER_220V;ML-3050,-,-,-,-,-,-	D2122	SA
7.6-62	JC61-00835A	FOOT-BACK;ML-1750,NBR,D13.6,-,10.5,-,-	F1010	SA
7.6-63	6107-001164	SPRING-TS;SUS304-WPB,-,PI0.15,D3.95,L12,	Z4156	SA
7.6-64	JC61-01619A	HOLDER-M_ACT REGI;SCX-5530FN,ABS,2.0,60.		SNA
7.6-65	JC66-01191A	LEVER-M_ACTUATOR REGI;SCX-5530FN,PBT+GF3		SNA
7.6-66	JC66-01190A	LEVER-M_ACT DUP OUT;SCX-5530FN,PBT+GF30%		SNA
7.6-67	JC61-01618A	HOLDER-M_ACT FEED;SCX-5530FN,ABS,2.0,49.		SNA
7.6-69	JC39-00524A	CBF HARNESS-LSU S/W;SCX-5530FN,CBF,UL 10	D2133	SA
7.6-70	JC63-00914A	SHIELD-P-HVPS;SCX-5530FN,SECC,0.8,243.1,		SNA
7.6-71	JC63-00961A	SHEET-INSULATOR_HVPS;SCX-5530FN,PC V2,0.		SNA
7.6-72	JC44-00107A	HVPS-ELBERT;-,24V,21.6V~27.6V,-,MAX 5KV,	D2168	SA
7.6-73	JC39-00519A	CBF HARNESS-SMPS;SCX-5530FN,CBF,UL 1061,	D2164	SA
7.6-74	JC39-00518A	CBF HARNESS-ENGINE;SCX-5530FN,CBF,UL 106	D2163	SA
7.6-75	JC39-00528A	CBF HARNESS-PAPER EMP;SCX-5530FN,CBF,UL	D2166	SA
7.6-76	JC39-00526A	CBF HARNESS-DUPLEX;SCX-5530FN,CBF,UL 106	D2165	SA
7.6-77	JC61-01623A	GUIDE-M_HOLDER TR;SCX-5530FN,ABS,2.5,31.		SNA
7.6-78	6107-001237	SPRING-ES;SUS304-WPB,-,P0.5,D4.5,L42,-,-		SNA
7.6-79	JC61-01622A	HOLDER-M_TR;SCX-5530FN,ABS,2.0,51.5,19.0		SNA
7.6-8	JC97-01788A	MEA UNIT-CLUTCH;ML-1710,SAMSUNG,-,-,-,-,	C9040	SA
7.6-8-1	JC66-00398A	SHAFT-FEED;ML-1710,POM(M90-44),-,-,NTR,-	F6210	SA
7.6-8-2	JC72-00981A	PMO-HUB CLUTCH;ML-1710,POM(M90-44),NTR,-		SNA
7.6-8-3	6107-001238	SPRING-TS;SUS304-WPB,-,PI0.5,D2.4,L16.4,		SNA
7.6-8-3	6107-001171	SPRING-TS;SWRS82A,-,0.75X0.5,D14.2,-,-,-	Z4161	SA
7.6-8-4	JC72-00978A	PMO-COLLAR_SPRING;ML-1710,POM(M90-44),NT	Z4125	SA
7.6-8-5	JC66-00393A	GEAR-FEED 1;ML-1710,POM(DELIN 8903),-,-,	F6071	SA
7.6-9	JC97-02394A	MEA UNIT-BRACKET FEED;SCX-5530FN,SEC,-,-		SNA
7.6-9-1	JC61-01582A	BRACKET-P-FEED;SCX-5530FN,SECC ,1.0,88.8		SNA
7.6-9-2	JC66-01166A	GEAR-IDLE Z29 HELICAL;SCX-5530FN,POM,0.5		SNA
7.6-9-3	6044-000231	RING-E;ID5.0,OD11.0,T0.6,PASS,STS304	R0006	SA
7.6-9-4	JC66-01164A	GEAR-RETARD 39/19;SCX-5530FN,POM,0.5/0.8		SNA
7.6-9-5	JC66-00484A	GEAR-T2 IDEL_Z27;CLP-500,POM,DE8903,M0.8	G0432	SA
7.6-9-6	6044-000125	RING-E;ID4,OD9,T0.6,PASS,STSC	R0004	SA
7.7-1	JC61-01603A	FRAME-M_MP;SCX-5530FN,PC+ABS,NH-1000T,V0		SNA
7.7-10	JC72-00761A	PMO-ROLLER CAM.MP;SCX-5100,POM,WHITE,-,-	K4061	SA
7.7-11	JC73-00141A	RPR-PAD CASSETTE;ML-1510,URETHANE SPONGE	R0020	SA
7.7-13	JC61-00926A	HOLDER-M-SENSOR_MP;ML-2250,ABS,-,22.3,36	H4108	SA
7.7-15	JC72-01338A	PMO-M-ACT EMPTY MP;ML-2250,PC,BLK,H31.4,	K3119	SA
7.7-16	JC39-00365A	CBF HARNESS-MPF SEN;SCX-4720F,CBF,UL1061	H1168	SA
7.7-17	JC97-02034A	MEA-PICK UP_MP;ML-2250,SEC,-,PICK UP-MP	D2174	SA
7.7-17-1	JC73-00194A	RUBBER-PICK UP MP;SCX-4720F,EPDM + IR,-,	P2148	SA
7.7-17-2	JC61-00925A	HOUSING-M_PICK UP_MP;ML-2250,PC+ABS,-,20	D2177	SA
7.7-17-3	JC61-00910A	HOUSING-M-PICK UP2_R2;SCX-4920N,PC+ABS,-	M2078	SA
7.7-18	JC66-00710A	GEAR-M-PICK UP_MP;ML-2250,POM,0.8,33,-,-	P2110	SA
7.7-2	JC97-02443A	MEA-IDLE FEED;SCX-5530FN,-,-,-,-,-,-		SNA
7.7-20	JC66-00709A	GEAR-M-HOLDER_MP;ML-2250,POM,0.8,33,-,-,	H4073	SA
7.7-21	JC66-01205A	CAM-M_PICK UP MP;ML-3051ND,POM,-,16.5*23	D2172	SA
7.7-2-1	JC61-01604A	HOLDER-M_IDLE FEED;SCX-5530FN,ABS,-,85.0		SNA
7.7-22	JC66-00399A	SHAFT-P-PICK_UP;ML-1710,SECC,-,-,-,-,0.8	P2160	SA
7.7-2-2	JC61-00484A	SPRING ETC-EXIT LOWER IDLE;SCX-5100,SUS3	Z4180	SA
7.7-23	JC61-00915A	STOPPER-M-PICK UP_R2;SCX-4920N,POM(DELIN	K3752	SA
7.7-2-3	JC61-01605A	HOLDER-M_SHAFT IDLE;SCX-5530FN,POM,5.2,1		SNA

ITscrap.eu

SA : SERVICE AVAILABLE SNA : SERVICE not AVAILABLE

Drawer#	SEC-Code	Description & Specification	Location	Service
7.7-24	JC72-00982A	PMO-IDLE PICK_UP;ML-1710,POM(M90-44),NTR	P2131	SA
7.7-2-4	JC66-01186A	ROLLER-IDLE FEED;SCX-5530FN,POM,16.0,48.		SNA
7.7-25	JC66-00720A	SHAFT-P-CORE;ML-1750,SECC 1.2T,203,-,-,-	O1068	SA
7.7-2-5	JC66-01172A	SHAFT-IDLE FEED;SCX-5530FN,SUM22+NI,74.6		SNA
7.7-26	JC61-00587A	BUSH-M-PICK_UP R;ML-1710,POM(M90-44),-,-	P2067	SA
7.7-2-6	JC63-00997A	COVER-M_IDLE FEED;SCX-5530FN,PC,-,18.5,8		SNA
7.7-27	JC61-00932A	BRACKET-P-PICKUP_MP;ML-2250,SECC,1.2,57.	P2122	SA
7.7-3	JC63-01094A	SHEET-GUIDE MP;SCX-5530FN,PET,0.125,25.0	D2169	SA
7.7-4	JC66-00396A	GEAR-IDLE 23;ML-1710,POM(M90-44),0.8,23,	G0256	SA
7.7-5	JC33-00015A	SOLENOID-MP;-,ML-2250,DC24V,-,-,-,-,300M	S8014	SA
7.7-6	JC61-00924A	HOLDER-M-PAD_MP;ML-2250,PC+ABS,-,48,24.2	H4029	SA
7.7-7	JC73-00140A	RPR-FRICTION PAD;ML-1510,NBB,1T 8.9*47,5	P0034	SA
7.7-9	JC61-00927A	PLATE-P-KNOCK UP_MP;ML-2250,SECC,1.0,252		SNA
7.8-1	JC31-00047A	MOTOR DC-BLDC MAIN;-,SCX-5530FN,-,-,-,-,	D2108	SA
7.8-2	JC61-01593A	BRACKET-P-GEAR MAIN;SCX-5530FN,SECC,1.6,		SNA
7.8-3	JC61-01597A	BRACKET-P-MOTOR MAIN;SCX-5530FN,SECC,1.2		SNA
7.8-4	JC66-01156A	GEAR-OPC RDCN 93/61;SCX-5530FN,POM,0.4/0		SNA
7.8-5	JC66-01157A	GEAR-OPC DRV 113/33;SCX-5530FN,POM,0.5/0		SNA
7.8-6	JC66-01162A	GEAR-FEED RDCN 55/18;SCX-5530FN,POM,0.5/		SNA
7.8-7	6031-000023	WASHER-PLAIN;-,ID5.9,OD10.0,T0.5,BLK,POL		SNA
7.8-8	6302-001056	GASKET;KHP-1495,L300,NTR,PE5321		SNA
7.9-1	JC61-01598A	BRACKET-P-FUSER EXIT;SCX-5530FN,SECC,1.6		SNA
7.9-2	JC31-00037E	MOTOR STEP-MAIN;M55SP-2NK,SCX-5530FN,1.2	D2160	SA
7.9-3	JC66-01158A	GEAR-EXIT RDCN 87/24;SCX-5530FN,POM,0.4/		SNA
7.9-6	JC66-01163A	GEAR-FUSER RDCN IN 95;SCX-5530FN,POM,0.4		SNA
7.9-7	JC66-00417A	GEAR-RDCN FUSER OUT;ML-2150,RAL4032,1.0,	F4099	SA
7.9-8	JC66-00340A	GEAR-HUB CLUTCH;SCX-5100,POM,M0.8,Z13,-,	C9033	SA
7.9-9	JC66-01210A	GEAR-FUSER IDLE FR;SCX-5530FN,NYLON,1.0,	D2173	SA
#N/A	JC68-01663A	MANUAL-QIG;ML-3050,SAMSUNG,16 LANGUAGE,-		SNA
#N/A	JC69-00912B	BOX-MAIN;ML-3050,DC3,A-1,393,483,597,597		SA
#N/A	JC96-03835A	ELA HOU-ENGINE;ML-3050,-,-,DOVE,-,-,-		SNA
#N/A	JC96-04051A	ELA HOU-SMPS;SCX-5530FN,-,-,ELBERT,220V,	D2104	SA
#N/A	JC99-01932A	PAA-LABEL;ML-3050,SEC,-,LABEL ,-,-		SNA
#N/A	JC99-01933A	PAA WOOD-PACKING;ML-3050,SEC,-,PACKING M		SNA
#N/A	JC99-01950D	INA-ACCESSORY;ML-3050,SAMSUNG,SEE,-,-,-		SNA
#N/A	0202-001240	SOLDER-WIRE;HSE-01,-,D3,SN/0.5CU/0.03NI/		SNA
#N/A	0202-001492	SOLDER-WIRE FLUX;HSE-02 LFM48 SR-34 S,-,		SNA
#N/A	0203-001100	TAPE-OPP MASKING;OPP/W75/CLR,T0.05,W75,L		SNA
#N/A	0204-000469	THINNER;#4662,-,0.795,-		SNA
#N/A	0204-002978	FLUX;KSP-70L,-,84%,FLUX,SPRAY		SNA
#N/A	2801-003886	CRYSTAL-UNIT;12MHz,50ppm,28-AAA,16pF,50o		SNA
#N/A	3702-000118	CONNECTOR-RIBBON;36P,FEMALE,ANGLE,AU		SNA
#N/A	3709-001131	CONNECTOR-CARD EDGE;100P,1.27MM,STRAIGHT		SNA
#N/A	3711-002000	HEADER-BOARD TO CABLE;BOX,18P,2R,2mm,STR		SNA
#N/A	3711-002808	HEADER-BOARD TO CABLE;BOX,7P,1R,2mm,STRA		SNA
#N/A	3711-002809	HEADER-BOARD TO CABLE;BOX,8P,1R,2mm,STRA		SA
#N/A	3711-002811	HEADER-BOARD TO CABLE;BOX,10P,1R,2mm,STR		SNA
#N/A	3711-003408	HEADER-BOARD TO CABLE;BOX,2P,1R,2mm,STRA		SNA
#N/A	3711-003410	HEADER-BOARD TO CABLE;BOX,4P,1R,2mm,STRA		SNA
#N/A	3711-003942	HEADER-BOARD TO CABLE;BOX,2P,1R,2MM,STRA		SA
#N/A	3711-003968	HEADER-BOARD TO CABLE;BOX,3P,1R,2.5mm,ST		SA
#N/A	3711-003969	HEADER-BOARD TO CABLE;BOX,2P,1R,2.5mm,ST		SNA
#N/A	3711-003981	HEADER-BOARD TO CABLE;BOX,28P,2R,2mm,STR		SA
#N/A	3711-004349	HEADER-BOARD TO CABLE;BOX,3P,1R,2MM,STRA		SA
#N/A	3722-000124	JACK-DIN;8P,-,AU,BLK,-		SNA
#N/A	3722-002303	JACK-USB;4P/1C,AU30U,BLK,ANGLE,B TYPE		SA

ITCPARTS.eu

SA : SERVICE AVAILABLE SNA : SERVICE not AVAILABLE

Drawer#	SEC-Code	Description & Specification	Location	Service
#N/A	6001-000130	SCREW-MACHINE;BH,+,M3,L6,ZPC(WHT),SWRCH1	-	SA
#N/A	6001-000568	SCREW-MACHINE;PH,+,M3,L8,NI PLT,SWRCH18A		SA
#N/A	6902-000288	BAG PE;LDPE,T0.05,W250,L450,TRP,8,2-		SNA
#N/A	6902-000312	BAG PE;HDPE,T0.015,W1000,L900,TRP,8,4-		SNA
#N/A	JB68-00073A	LABEL(R)-BAR CODE;SF-3000,PY,38X6.5,T0.1		SNA
#N/A	JB68-00916A	LABEL RATING-BLANK;SF-340,SEC,TETRON,0.0		SNA
#N/A	JC02-00047A	TONER-ELDO;SCX-5530FN,-,-,8.5UM,-,-,-		SNA
#N/A	JC39-00533A	CBF HARNESS-LED_OPE;ML-3050,CBF,UL1061,8		SA
#N/A	JC46-00276A	S/W APPLICATION-CD;-,ML-3050,PRT DRV,1.0		SNA
#N/A	JC61-00918B	GUIDE-M-EXTENSION L2;ML-2250,HIPS,-,184.	E5013	SA
#N/A	JC61-01615A	FRAME-M_DEV UPPER;SCX-5530FN,ABS,-,HB,BL		SNA
#N/A	JC61-01692A	SUPPORT-HOLDER PAD;SCX-5530FN,POLYAMIDE		SNA
#N/A	JC61-01693A	GUIDE-M_ACT EMPTY;SCX-5330N,ABS,2.5,55.0		SNA
#N/A	JC63-00963A	COVER-M_DUMMY DUP WO;SCX-5530FN,HIPS,2.5		SNA
#N/A	JC63-00965B	COVER-SIDE;ML-3051ND,PC+ABS,2.5,398.4,25	D2116	SA
#N/A	JC63-00974A	COVER-M_SUB CST;ML-3051ND,HIPS,2.5,393.9		SNA
#N/A	JC64-00253A	INDICATOR-M_CASSETTE;SCX-5530FN,HIPS,-,B		SNA
#N/A	JC68-00690A	MANUAL-(CARD)WARRANTY CARD;ML-1210,XEU,E		SNA
#N/A	JC68-01381B	LABEL(R)-PPID(DEVE);COMMON,DELL,ART,0.05		SNA
#N/A	JC68-01584A	LABEL(P)-BLANK 90*25;CLP-510,SEE,ART 100	D2120	SA
#N/A	JC68-10914D	LABEL(P)-SERIAL NO;ML-85,ART,70X15,G100,		SNA
#N/A	JC68-10932A	LABEL(P)-BLANK(ML);ML-85,ART,70X60,G100,		SNA
#N/A	JC69-00921A	CUSHION-MAIN_R;ML-3050,EPS,50,385,595,12		SNA
#N/A	JC69-00921B	CUSHION-MAIN_L;ML-3050,EPS,50,385,595,14		SNA
#N/A	JC69-00921C	CUSHION-MAIN;ML-3050,EPS,20,81,289,35,10		SNA
#N/A	JC70-00300A	ADJUST-M-CASSETTE_L;ML-1400,ABS,-,-,-,VI	K2014	SA
#N/A	JC70-00301A	ADJUST-M-CASSETTE_R;ML-1400,ABS,-,-,-,VI	K2015	SA
#N/A	JC72-00971A	PMO-EXTENSION SMALL;ML-1710,ABS(HF-0660I	E5014	SA
#N/A	JC94-01151A	PHANTOM AU JC92-01796B		SNA
#N/A	JC96-03760A	ELA HOU-FRAME ETC;SCX-5530FN,-,-,ELBERT,		SNA
#N/A	JC97-01692A	MEA UNIT- ROLLER CLEAN;ML-2150,SAMSUNG,-	K3609	SA
#N/A	JC97-02001B	MEA-PROTECTION CARD;ML-2250,SEC,-,PROTEC		SNA
#N/A	JC97-02390A	MEA ETC-DEVE;SCX-5530FN,SEC,DOMESTIC,-,-		SNA
#N/A	JC97-02425A	MEA-CHARGE ROLLER;SCX-5530FN,SEC,DOMESTI		SNA
#N/A	JF68-10532B	LABEL(P)-BAR CODE;CLP-500,-,YUPO PAPER,1		SNA
#N/A	0201-001162	ADHESIVE-CYA;LOCTITE403,NTR,1250,20G		SNA
#N/A	0201-001183	ADHESIVE-AA;ARON ALPHA #202F,NTR,100,20G		SNA
#N/A	0201-001235	ADHESIVE-TS;DEH-390D,RED,400,-		SNA
#N/A	0202-001459	SOLDER-CREAM;S3X58-M405,-,D20~38§-,96.5SS		SNA
#N/A	0203-001159	TAPE-FILAMENT;#8915,T0.15,W12,L55000,CLR		SNA
#N/A	0203-001846	TAPE-CONDUCTIVE;DK-K102MM-5-7,CONDUCTIVE		SNA
#N/A	0205-000005	GREASE-BEARING;EP56,DIAMOND HYDRO FLUID,		SNA
#N/A	0205-001003	GREASE-BEARING;NYOGEL788,DAMPING GREASE,		SNA
#N/A	0205-001059	GREASE-BEARING;PETAMO GHV 133,BEIGE,15KG		SNA
#N/A	0205-001067	GREASE-GRAPHITE;NYOGEL 756G,HYDRO CARBON		SNA
#N/A	0205-001080	GREASE-BEARING;NYOGEL 774H,NOISE DAMPING		SNA
#N/A	0205-001144	GREASE-BEARING;SF-112,HANARL,NOISE TAMPI		SNA
#N/A	0401-000116	DIODE-SWITCHING;MMSD914T1,100V,200MA,SOD		SNA
#N/A	0402-000129	DIODE-RECTIFIER;1N4003,200V,1A,DO-41,TP		SA
#N/A	0404-000112	DIODE-SCHOTTKY;RB420D,40V,100MA,SOT-23,T		SA
#N/A	0407-000122	DIODE-ARRAY;KDS226,80V,300mA,C2-3,SOT-23		SA
#N/A	0501-000279	TR-SMALL SIGNAL;KSA1182-Y,PNP,150mW,SOT-		SA
#N/A	0501-000342	TR-SMALL SIGNAL;KSC1623-Y,NPN,200mW,SOT-		SA
#N/A	0501-000457	TR-SMALL SIGNAL;MMBT2222A,NPN,350mW,SOT-		SA
#N/A	0501-000632	TR-SMALL SIGNAL;2SB1197K,PNP,200mW,SOT-2		SA
#N/A	0601-001830	LED;SMD,GRN,1.6x0.8x0.4mm,570nm,1.6x0.8x		SA

ITPARTS.eu

SA : SERVICE AVAILABLE SNA : SERVICE not AVAILABLE

Drawer#	SEC-Code	Description & Specification	Location	Service
#N/A	0801-002379	IC-CMOS LOGIC;74LCX16245,TRANSCEIVER,TSS		SA
#N/A	0801-002446	IC-CMOS LOGIC;74LCX14,SCHMITT INVERTER,T		SNA
#N/A	0904-001989	IC-USC;ISP1582BS,-,HVQFN56,56P,8X8X0.85M		SA
#N/A	1003-001729	IC-MOTOR DRIVER;AN44060A,HSOP,28P,326MIL		SA
#N/A	1006-001224	IC-LINE TRANSCEIVER;74LVX161284,TSSOP,48		SA
#N/A	1103-001279	IC-EEPROM;24C32,4Kx8,SOP,8P,5x4mm,2.5/5.		SA
#N/A	1105-001390	IC-DRAM;K4S641632,-,64Mbit,4x1Mx16,TSOP(		SA
#N/A	1107-001590	IC-FLASH MEMORY;S29GL064M,64MBIT,8MX8/4M		SA
#N/A	1202-000164	IC-VOLTAGE COMP.;393,SOP,8P,150MIL,DUAL,		SA
#N/A	1203-002233	IC-RESET;XC61F,SOT-23,3P,-,PLASTIC,0.7/1		SNA
#N/A	1203-003739	IC-DC/DC CONVERTER;MVPG31,DFN,12P,4X3MM,		SNA
#N/A	1205-002339	IC-CLOCK GENERATOR;CY25811SC,SOIC,8P,150		SA
#N/A	2005-000419	R-WIRE WOUND,NON;0.33ohm,1%,1W,AA,TP,4.3		SNA
#N/A	2007-000070	R-CHIP;0ohm,5%,1/10W,TP,1608		SA
#N/A	2007-000071	R-CHIP;22ohm,5%,1/10W,TP,1608		SA
#N/A	2007-000076	R-CHIP;330ohm,5%,1/10W,TP,1608		SA
#N/A	2007-000078	R-CHIP;1Kohm,5%,1/10W,TP,1608		SA
#N/A	2007-000082	R-CHIP;3.3Kohm,5%,1/10W,TP,1608		SA
#N/A	2007-000086	R-CHIP;5.6Kohm,5%,1/10W,TP,1608		SA
#N/A	2007-000090	R-CHIP;10Kohm,5%,1/10W,TP,1608		SA
#N/A	2007-000094	R-CHIP;22Kohm,5%,1/10W,TP,1608		SA
#N/A	2007-000098	R-CHIP;56Kohm,5%,1/10W,TP,1608		SA
#N/A	2007-000105	R-CHIP;200Kohm,5%,1/10W,TP,1608		SA
#N/A	2007-000107	R-CHIP;470Kohm,5%,1/10W,TP,1608		SA
#N/A	2007-000113	R-CHIP;33ohm,5%,1/10W,TP,1608		SA
#N/A	2007-000119	R-CHIP;560ohm,5%,1/10W,TP,1608		SA
#N/A	2007-000123	R-CHIP;1.5Kohm,5%,1/10W,TP,1608		SA
#N/A	2007-000134	R-CHIP;33Kohm,5%,1/10W,TP,1608		SA
#N/A	2007-000309	R-CHIP;10ohm,5%,1/10W,TP,1608		SA
#N/A	2007-000402	R-CHIP;150ohm,5%,1/10W,TP,1608		SA
#N/A	2007-000475	R-CHIP;1Mohm,1%,1/10W,TP,1608		SA
#N/A	2007-000539	R-CHIP;200ohm,5%,1/10W,TP,1608		SA
#N/A	2007-000704	R-CHIP;3.6Kohm,5%,1/10W,TP,1608		SA
#N/A	2007-000729	R-CHIP;300ohm,5%,1/10W,TP,1608		SA
#N/A	2007-000839	R-CHIP;39ohm,5%,1/10W,TP,1608		SA
#N/A	2007-000965	R-CHIP;5.1Kohm,5%,1/10W,TP,1608		SA
#N/A	2007-001002	R-CHIP;510ohm,5%,1/10W,TP,1608		SA
#N/A	2007-001056	R-CHIP;6.2Kohm,5%,1/10W,TP,1608		SA
#N/A	2007-001139	R-CHIP;7.5Kohm,1%,1/10W,TP,1608		SA
#N/A	2007-002901	R-CHIP;12.1Kohm,1%,1/10W,TP,1608		SA
#N/A	2007-002916	R-CHIP;475Kohm,1%,1/10W,TP,1608		SA
#N/A	2007-007239	R-CHIP;31.6Kohm,1%,1/10W,TP,1608		SNA
#N/A	2007-007521	R-CHIP;14.7Kohm,1%,1/10W,TP,1608		SA
#N/A	2007-008371	R-CHIP;280Kohm,1%,1/10W,TP,1608		SNA
#N/A	2007-008567	R-CHIP;15.4Kohm,1%,1/10W,TP,1608		SNA
#N/A	2011-000002	R-NET;22ohm,5%,1/16W,L,CHIP,8P,TP,3216		SA
#N/A	2011-000881	R-NET;33ohm,5%,1/16W,L,CHIP,8P,TP,3.2x1.		SA
#N/A	2011-001094	R-NET;39OHM,5%,1/16W,L,CHIP,8P,TP		SA
#N/A	2011-001334	RC-NETWORK;1K/5.1K/39ohm,10%,150pF,-,6V,		SNA
#N/A	2203-000206	C-CER,CHIP;100nF,10%,50V,X7R,2012		SA
#N/A	2203-000257	C-CER,CHIP;10nF,10%,50V,X7R,1608		SA
#N/A	2203-000357	C-CER,CHIP;0.15nF,5%,50V,C0G,1608		SA
#N/A	2203-000384	C-CER,CHIP;0.015nF,5%,50V,C0G,1608		SA
#N/A	2203-000440	C-CER,CHIP;1nF,10%,50V,X7R,1608		SA
#N/A	2203-000491	C-CER,CHIP;2.2nF,10%,50V,X7R,1608		SA
#N/A	2203-000626	C-CER,CHIP;0.022nF,5%,50V,C0G,1608		SA

ITCnotes.eu

SA : SERVICE AVAILABLE SNA : SERVICE not AVAILABLE

Drawer#	SEC-Code	Description & Specification	Location	Service
#N/A	2203-005249	C-CER,CHIP;100nF,10%,50V,X7R,1608		SNA
#N/A	2203-005819	C-CER,CHIP;1000nF,+80-20%,16V,Y5V,-,1608		SNA
#N/A	2203-006474	C-CER,CHIP;22000nF,20%,6.3V,X5R,2012		SA
#N/A	2203-006646	C-CER,CHIP;10000nF,10%,6.3V,X5R,2012		SA
#N/A	2401-000042	C-AL;100uF,20%,16V,GP,TP,6.3x7,5		SA
#N/A	2401-002300	C-AL;47uF,20%,50V,GP,TP,6.3x11,5		SA
#N/A	2402-000008	C-AL,SMD;47uF,20%,16V,GP,TP,6.6x6.6x5.4		SA
#N/A	2402-000173	C-AL,SMD;4.7uF,20%,35V,GP,TP,4.3x4.3x5.4		SA
#N/A	2402-001178	C-AL,SMD;10uF,20%,16V,WT,TP,4.3x4.3x5.8m		SA
#N/A	2703-002055	INDUCTOR-SMD;2.2UH,20%,6363		SNA
#N/A	3301-000317	BEAD-SMD;120ohm,2012,TP,-,-		SA
#N/A	3301-000325	BEAD-SMD;60ohm,3.2x2.5x1.3mm,400mA,TP,,,		SNA
#N/A	6002-000440	SCREW-TAPPING;PWH,+,-,2,M3,L8,ZPC(BLK),S		SA
#N/A	6501-000004	CABLE TIE;DA-80,T1,W2.5,L80,NTR,NYLON66	K2756	SA
#N/A	6902-000332	BAG CONDUCTIVE;PE+CARBON,T0.1,W250,L500,		SNA
#N/A	JC13-00028A	IC ASIC-SPGPV3;SPGPV3,ML-2550 VE,496PIN,		SA
#N/A	JC41-00320A	PCB-MAIN CONTROLLER;ML-3051ND,FR-4,6,-,1		SNA
#N/A	JC61-01588A	HOLDER-M_LOCKER;ML-3051ND,HIPS HB,-,118.	D2136	SA
#N/A	JC61-01590A	HOLDER-M_DR L;SCX-5530FN,PC,-,10.2,18.5,		SNA
#N/A	JC61-01591A	HOLDER-M_DR R;SCX-5530FN,PC,-,8.2,18.5,B		SNA
#N/A	JC61-01612A	FRAME-M_DEV LOWER;SCX-5530FN,ABS,-,HB,BL		SNA
#N/A	JC61-01614A	FRAME-M_CAP CR;SCX-5530FN,ABS,-,HB,BLK,-		SNA
#N/A	JC62-00140A	SEAL-BLADE SIDE_BK;CLP-500,PE FORM,GRAY,		SNA
#N/A	JC62-00143A	SEAL-PROTECTION CARD;SCX-4920,POLYURETHA		SNA
#N/A	JC62-00149A	SEAL-CAP DEVE;ML-1610,POLYURETHANE FOAM,		SNA
#N/A	JC62-00150A	SEAL-SUS BLADE;ML-1610,POLYURETHANE FOAM		SNA
#N/A	JC62-00156A	SEAL-BOSS_R;ML-1610,CR,BLACK,T5,-,D7.5,-		SNA
#N/A	JC62-00252A	SEAL-DEVE;SCX-5530FN,PTFE FELT+PORON,-,3		SNA
#N/A	JC62-00253A	SEAL-SUPPORT L;SCX-5530FN,PORON,-,6,7.84		SNA
#N/A	JC62-00254A	SEAL-SUPPORT R;SCX-5530FN,PORON,-,6,7.84		SNA
#N/A	JC62-00255A	SEAL-SUPPLY;SCX-5530FN,CR ,NTR,5,5.57,7.		SNA
#N/A	JC62-00344A	SEAL-FILM REAR;SCX-5530FN,PET FILM,-,0.0		SNA
#N/A	JC63-00446E	TRAY-M-ASF_INPUT UPPER;ML-3051ND,HIPS,-,	D2137	SA
#N/A	JC63-00447E	TRAY-M-ASF_FOLDER;ML-3051ND,HIPS,2.5,235	D2138	SA
#N/A	JC63-00916A	SHIELD-P-CONTROLLER;ML-3051ND,SECC,0.8,1	D2139	SA
#N/A	JC63-00918A	GROUND-P-EARTH TR;SCX-5530FN,SUS301-1/2H		SNA
#N/A	JC63-00937A	COVER-M STACKER REAR;SCX-5530FN,ABS,2.5,		SNA
#N/A	JC63-00964A	COVER-M_MIDDLE;ML-3051ND,HIPS,2.5,388.4,		SNA
#N/A	JC63-00966A	COVER-M_SIDE L;ML-3051ND,ABS,2.5,398.2,2	D2140	SA
#N/A	JC63-00967A	COVER-M_DIMM;ML-3051ND,ABS,2.5,117.5,210	D2141	SA
#N/A	JC63-00968A	COVER-M_FACE UP;ML-3051ND,ABS,2.5,291.9,		SNA
#N/A	JC63-00969A	COVER-M_FRONT;ML-3051ND,HIPS,2.5,394.0,1		SNA
#N/A	JC63-00970A	COVER-M_TOP;ML-3051ND,ABS,2.5,393.4,327.	D2142	SA
#N/A	JC63-00971A	TRAY-M-ASF_INPUT;ML-3051ND,HIPS,2.5,280.		SNA
#N/A	JC63-00973A	COVER-M_KEY MENU_LED;ML-3050,HIPS,2.5,93		SNA
#N/A	JC63-01098A	SHEET-WNPC;SCX-5530FN,PC,0.254T,13.5,20.		SNA
#N/A	JC64-00047A	KEY-M-SAVE MODE;ML-2150,ACRYL,-,-,NATURA	K0049	SA
#N/A	JC64-00233A	KNOB-M_LOCKER;ML-3051ND,HIPS,-,84.5,20.3	D2143	SA
#N/A	JC64-00235A	KEY-M_BUTTON;ML-3051ND,ABS,84.4*39.3,HB,		SNA
#N/A	JC64-00236A	KEY-M_STOP;ML-3051ND,ABS,12.6*10,HB,SOFT		SNA
#N/A	JC64-00254A	KEY-M_DEMO;ML-3050,HIPS,16.2*7.5,HB,VIOL		SA
#N/A	JC66-00381A	GEAR-AGITATOR;ML-1710,POM,0.6,22,-,-,-,-	G0164	SA
#N/A	JC66-00435A	GEAR-IDLE CR 17;ML-2150,POM, F20-03,0.6,		SNA
#N/A	JC66-00436A	GEAR-CLEAN 23;ML-2150,HYTREL5526 ,0.6,23		SNA
#N/A	JC66-00538A	ROLLER-CLEANING;ML-2150,URETHANE FOAM+SU		SNA
#N/A	JC66-00696A	GEAR-IDLE 28/17;SCX-4920N,POM,0.6,28/17,		SNA

ITCOMPS.eu

SA : SERVICE AVAILABLE SNA : SERVICE not AVAILABLE

Drawer#	SEC-Code	Description & Specification	Location	Service
#N/A	JC66-00699A	GEAR-IDLE 37/19;SCX-4920N,POM,0.6/0.5,37		SNA
#N/A	JC66-00828A	ROLLER-CHARGE;ML-1610,NBR+ECO,D12,L230,N		SNA
#N/A	JC66-01153A	GEAR-IDLE 23 FUSER;ML-3560,HTNFR52G30L,M		SNA
#N/A	JC66-01178A	GEAR-DEVE;SCX-5530FN,POLYKETONE,0.8,15,-		SNA
#N/A	JC66-01180A	GEAR-SUPPLY;SCX-5530FN,POM(DE8903),0.6,2		SNA
#N/A	JC66-01182A	GEAR-RDCN 16/18;SCX-5530FN,POM,0.8/0.6,1		SNA
#N/A	JC66-01189A	LEVER-M_ACTUATOR FEED;SCX-5530FN,PBT+GF3		SNA
#N/A	JC66-01243A	ROLLER-DEVE;SCX-5530FN,NBR+ECO,?14.07,L:		SNA
#N/A	JC66-01283A	DAMPER-FRAME EXIT;SCX-5530FN,NBB,-,1,8,8		SNA
#N/A	JC66-01285A	ROLLER-SUPPLY;SCX-5530FN,Silicon Foam,¡ËS		SNA
#N/A	JC66-40930A	GEAR-AGITATOR;ML-1650,POM,-,AW-01,-,NTR,		SNA
#N/A	JC67-00068C	CAP-M_SUB ACTUATOR;SCX-5530FN,HIPS HB,-,		SNA
#N/A	JC67-00147A	LENS LED-M_STATUS;ML-3051ND,PMMA(ACRYL),		SNA
#N/A	JC67-00152A	CAP-M_DEVE R;SCX-5530FN,ABS,2,8.5,36.5,B		SNA
#N/A	JC68-00317A	LABEL(R)-HOT CAUTION,KME;ML-7050,TETRON,		SNA
#N/A	JC68-00407A	LABEL(R)-HV FUSER;ML-6060,PVC,-,220V,-,,	L0006	SNA
#N/A	JC68-01134A	LABEL(P)-BLANK(FUSER);ML-1710D3,-,WHITE		SNA
#N/A	JC68-01296B	MANUAL-DEVE_SHEET;COMMON,SEC,-,-,ART,280		SNA
#N/A	JC68-01581A	LABEL(P)-CAUTION HOT;COMMON,SAMSUNG,PET,		SNA
#N/A	JC68-01668A	LABEL(P)-JAM REMOVAL;SCX-5530FN,-,WHITE		SNA
#N/A	JC68-01669A	LABEL(R)-FUSER;SCX-5530FN,-,WHITE PET,T0		SNA
#N/A	JC68-01790B	LABEL-BLANK;ML-3051ND,SEC,ART,0.05,50,13		SNA
#N/A	JC68-30928E	LABEL(P)-CAUTION, HOT_FU;COMMON,-,PET,T0	L0020	SNA
#N/A	JC70-00478D	ADJUST-M_MP L;SCX-5530FN,ABS,-,82,128.4,		SNA
#N/A	JC70-00479D	ADJUST-M_MP R;SCX-5530FN,ABS,-,82,128.4,		SNA
#N/A	JC70-40910A	ICT-SHAFT GEAR;ML-5000,SUM24L,¡Ë4,-,-,-,S		SNA
#N/A	JC72-01346D	PMO-STACKER RX;ML-3051ND,HIPS,VIOLETSMOK	D2150	SA
#N/A	JC72-01349A	PPR-SPACER SR_L;ML-1610,PET OR PC,NTR,T0		SNA
#N/A	JC72-41051A	PMO-BUSHING RIGHT;ML-6000,POM(M90-44),BL	D2151	SA
#N/A	JC75-00044A	MEC-BUSHING AGI L;SF-5100,SEC,POM+SANTOP		SNA
#N/A	JC92-01751A	PBA SUB-OPE;ML-3050,SEC,-,-,-,-,-,80MM*6		SA
#N/A	JC96-03828A	ELA HOU-HVPS;SCX-5530FN,-,-,ELBERT,-,-,-		SNA
#N/A	JC97-01946A	MEA-AGITATOR 2;SCX-4920N,DELL,-,AGITATOR		SNA
#N/A	JC97-02407A	MEA-PLATE DEV L;SCX-5530FN,SEC,DOMESTIC,		SNA
#N/A	JC97-02408A	MEA-PLATE DEV R;SCX-5530FN,SEC,DOMESTIC,		SNA
#N/A	JC97-02409A	MEA ETC-OPC;SCX-5530FN,SEC,DOMESTIC,-,-,		SNA
#N/A	JC97-02427A	MEA-SUS BLADE;SCX-5530FN,SEC,DOMESTIC,-,		SNA
#N/A	JC97-02692A	MEA-AGITATOR;SCX-5530FN,SEC,-,-,-,-,-		SNA
#N/A	JG72-40960A	PMO-CAP TONER;SF6000,PP,BLK,-,-,VO,-,-,-		SNA
#N/A	0601-001459	LED;ROUND,GRN,3mm,570nm		SA
#N/A	3404-000165	SWITCH-TACT;12V,50mA,160gf,6x6mm,SPST	D2158	SA
#N/A	3711-002807	HEADER-BOARD TO CABLE;BOX,6P,1R,2mm,STRA		SNA
#N/A	3711-003035	HEADER-BOARD TO CABLE;BOX,14P,2R,2mm,STR		SA
#N/A	3711-003409	HEADER-BOARD TO CABLE;BOX,3P,1R,2mm,STRA		SNA
#N/A	3711-004379	HEADER-BOARD TO CABLE;BOX,4P,1R,2mm,STRA		SA
#N/A	JB75-00382A	MEC-ANTISTATIC BRUSH ATT;SF-330,SAMSUNG,		SNA
#N/A	JC39-00517A	CBF HARNESS-CRUM2;SCX-5530FN,CBF,UL 1061	D2162	SA
#N/A	JC39-00574A	CBF HARNESS-LED EXTEN;ML-3050,CBF,UL 106		SA
#N/A	JC41-00218A	PCB-TERMINAL;SCX-6320F,FR-4,2L,-,1.6T,54		SNA
#N/A	JC61-00025A	SPRING ETC-CS-CHARGE APOLLO;SF-5100,SUS		SNA
#N/A	JC61-01606A	BLADE-P_SUS;SCX-5530FN,SUS301-CSP 1/2H ,		SNA
#N/A	JC61-01607A	BRACKET-P_BLADE;SCX-5530FN,SPCC,1.2,13.1		SNA
#N/A	JC61-01613A	FRAME-M_CLEANING;SCX-5530FN,ABS+GF20%,-,		SNA
#N/A	JC61-01616A	PLATE-M_DEVE L;SCX-5530FN,PC,-,34.3,161,		SNA
#N/A	JC61-01617A	PLATE-M_DEVE R;SCX-5530FN,PC,-,49.72,161		SNA
#N/A	JC62-00249A	SEAL-CLEAN L;SCX-5530FN,PTFE FELT+PORON,		SNA

ITcomps.eu

SA : SERVICE AVAILABLE SNA : SERVICE not AVAILABLE

Drawer#	SEC-Code	Description & Specification	Location	Service
#N/A	JC62-00250A	SEAL-CLEAN R;SCX-5530FN,PTFE FELT+PORON,		SNA
#N/A	JC62-00251A	SEAL-CLEAN SUB;SCX-5530FN,POLYURETHAN FO		SNA
#N/A	JC62-00304A	SEAL-FILM OPC;SCX-5530FN,URETHANE FILM,-		SNA
#N/A	JC63-00383A	SHEET-FILM AGITATOR2;SCX-4920N,PET,0.1,1		SNA
#N/A	JC63-01153A	GROUND-P_BRUSH;SCX-5530FN,SUS301-1/2H,0.		SNA
#N/A	JC66-00823A	DRUM-OPC;ML-1610,AL A30 OR A60,-,24,248,		SNA
#N/A	JC66-01179A	GEAR-OPC L;SCX-5530FN,PC(LS-1250),0.8,29		SNA
#N/A	JC66-01185A	SHAFT-OPC;SCX-5530FN,SUS303,287,6,NTR,-,		SNA
#N/A	JC67-00153A	CAP-M CRUM;SCX-5530FN,ABS,2,28.7,35.6,BL		SNA
#N/A	JC70-00153A	IPR-ELECTRODE CHARGE;ML-4500,SUS301,-,8.		SNA
#N/A	JC70-00526A	ELECTRODE-P_SR;SCX-5530FN,SUS301-CSP,-,-		SNA
#N/A	JC71-00009A	NPM-BUSHING DEV R;ML-6060,BRONZE,D7*12,-		SNA
#N/A	JC72-00081A	PMO-BUSHING AGI L;SF-5100,POM,BLK,-,-,-,		SNA
#N/A	JC72-00083A	PMO-HOLDER CR;SF-5100,POM,BLK,-,-,-,-,-		SNA
#N/A	JC72-01309A	PPR-FILM AGITATOR;ML-2150,PET SHEET,NTR,		SNA
#N/A	JC72-01321A	PMO-AGITATOR 1;SCX-4920N,ABS+GF20,BLK,L2		SNA
#N/A	JC72-01322A	PMO-AGITATOR 2;SCX-4920N,ABS,BLK,216.8*3		SNA
#N/A	JC72-10925A	PPR-FILM SUPPORT AGI;ML-5000,PET T0.3,NT		SNA
#N/A	JC72-40332A	PMO-BUSHING_CHARGE;ML-80,POM,BLK,HB,-		SNA
#N/A	JC72-41105A	PMO-BUSHING DEV;ML-5000,POM,NTR,-,-,-,-		SNA
#N/A	JC73-00101A	RPR-SEAL CLN BRKT;ML-6060,URETHANE FOAM,		SNA
#N/A	JC73-40906A	RMO-SEAL AGITATOR;ML-5000,SANTOPRENE,-,-		SNA
#N/A	JC75-00043A	MEC-GEAR OPC R;SF-5100,SEC,-,-,BLK,-,-,-		SNA
#N/A	JC92-01753A	PBA SUB-CRUM;SCX-5530FN,SEC,-,-,-,-,-,21		SNA
#N/A	JC94-01134A	REV 0.2		SNA
#N/A	JC94-01162A	REV 0.2		SNA
#N/A	JC97-02426A	MEA-CLEANING BLADE;SCX-5530FN,SEC,DOMEST		SNA
#N/A	0601-000003	LED;ROUND,RED/GRN,3.1MM,650/563NM,3.8X5.		SA
#N/A	JC41-00319A	PCB-CONNECTION;SCX-5530FN,FR-1,1,-,1.6T,		SNA
#N/A	JC41-00322A	PCB-LED_OPE;ML-3050,FR-1,1,-,1.6T,80*66M		SNA
#N/A	JC61-01608A	BRACKET-P_CLEANING;SCX-5530FN,SECC,1.2,1		SNA
#N/A	JC61-01698A	BLADE-CLEANING;SCX-5530FN,POLY-URETHANE,		SNA
#N/A	JC66-00012A	GEAR-OPC R;SF-5100,POM(M90-44),BLK,M0.6,	O1065	SA
#N/A	JC71-00002A	NPR-EARTH OPC APOLLO;SF-5100,C5210P-H,0.		SNA
#N/A	JC94-01132A	V0.0		SNA
#N/A	0407-000101	DIODE-ARRAY;DA204K,20V,100mA,C2-3,SOT-23		SA
#N/A	1103-001367	IC-EEPROM;AT88SC0204C,2KBIT,256X8BIT,SOP		SNA
#N/A	2007-000033	R-CHIP;0ohm,5%,1/4W,TP,3216		SA
#N/A	2007-000074	R-CHIP;100ohm,5%,1/10W,TP,1608		SA
#N/A	2007-000084	R-CHIP;4.7Kohm,5%,1/10W,TP,1608		SA
#N/A	2203-000189	C-CER,CHIP;100nF,+80-20%,25V,Y5V,1608		SA
#N/A	2203-000236	C-CER,CHIP;0.1nF,5%,50V,C0G,1608		SA
#N/A	JC39-40511A	CBF HARNESS;ML-80,JUMPER,AWG22,52mm,SILV	D2176	SA
#N/A	JC41-00314A	PCB-CRUM;SCX-5530FN,FR-1,1,-,1.6T,21.8*3		SNA

ITSPares.eu